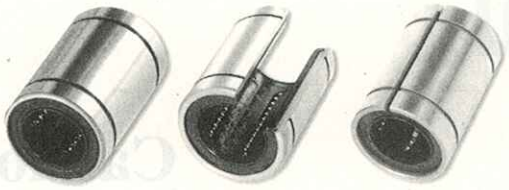

LM LM OP LM AJ

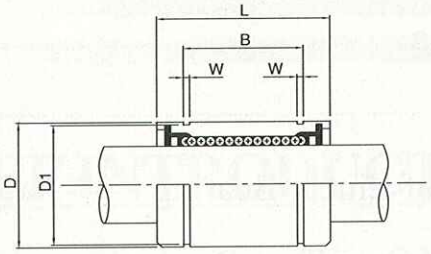

Model No.								
Standard Type	Ball circuit	Open Type	Ball circuit	Adjustable Type	Ball circuit	Weight (g)	dr (mm)	Tolerance (mm)
LM4UU	4	–	–	LM4UUAJ	4	2	4	0
LM5UU	4	–	–	LM5UUAJ	4	4	5	-8
LM6UU	4	–	–	LM6UUAJ	4	8	6	0 -9
LM8SUU	4	–	–	LM8SUUAJ	4	11	8	
LM8UU	4	–	–	LM8UUAJ	4	16	8	
LM10UU	4	–	–	LM10UUAJ	4	30	10	
LM12UU	4	–	–	LM12UUAJ	4	31.5	12	
LM13UU	4	–	–	LM13UUAJ	4	43	13	
LM16UU	5	LM16UUOP	4	LM16UUAJ	5	69	16	0 -10
LM20UU	5	LM20UUOP	4	LM20UUAJ	5	87	20	
LM25UU	6	LM25UUOP	5	LM25UUAJ	6	220	25	
LM30UU	6	LM30UUOP	5	LM30UUAJ	6	250	30	
LM35UU	6	LM35UUOP	5	LM35UUAJ	6	390	35	0 -12
LM40UU	6	LM40UUOP	5	LM40UUAJ	6	585	40	
LM50UU	6	LM50UUOP	5	LM50UUAJ	6	1580	50	
LM60UU	6	LM60UUOP	5	LM60UUAJ	6	2000	60	0/-15

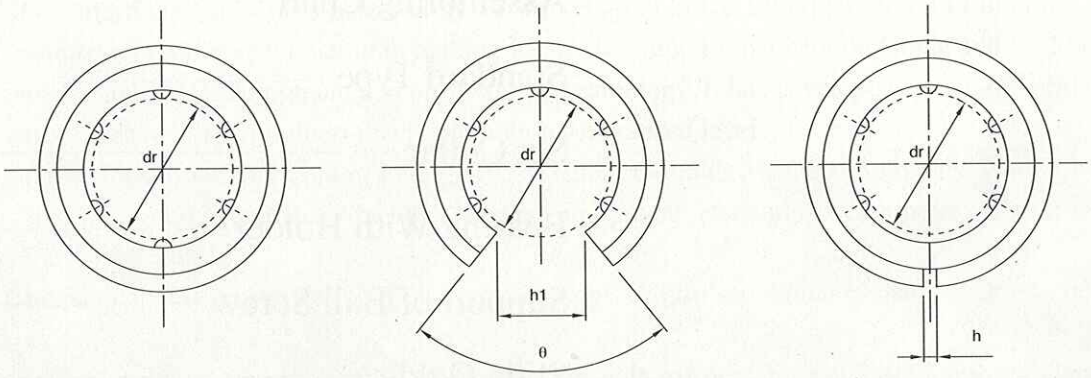

Main Dimensions and Precision (m m)												Radial clearance (max) μm	Basic Load Rating(kgf)	
Nominal Part No	D (mm)	Tolerance (μm)	L (mm)	Tolerance (μm)	B (mm)	Tolerance (μm)	W (mm)	D1 (mm)	h (mm)	h1 (mm)	θ		Dynamic C	Static CO
LM4UU	8		12		–		–	–	1	–	–	-5	9	13
LM5UU	10		15		10.2		1.1	9.6	1	–	–	-5	17	21
LM6UU	12	0 -11	19	0 -0.2	13.5	0 -0.2	1.1	11.5	1	–	–	-5	20	27
LM8SUU	15		17		11.5		1.1	14.3	1	–	–	-5	17	23
LM8UU	15		24		17.5		1.1	14.3	1	–	–	-5	27	41
LM10UU	19	0 -13	29		22		1.3	18	1	–	–	-5	38	55
LM12UU	21		30		23		1.3	20	1.5	–	–	-5	42	60
LM13UU	23		32		23		1.3	22	1.5	–	–	-7	51	78
LM16UU	28		37		26.5		1.6	27	1.5	11	80°	-7	78	119
LM20UU	32	0 -16	42		30.5		1.6	30.5	1.5	11	60°	-9	88	140
LM25UU	40		59	0 -0.3	41	0 -0.3	1.85	38	2	12.5	50°	-9	100	159
LM30UU	45		64		44.5		1.85	43	2.5	15	50°	-9	159	279
LM35UU	52	0 -19	70		49.5		2.1	49	2.5	17	50°	-13	169	319
LM40UU	60		80		60.5		2.1	57	3	20	50°	-13	219	409
LM50UU	80		100		74		2.6	76.5	3	25	50°	-13	389	808
LM60UU	90	0/-22	110		85		3.15	86.5	3	30	50°	-16	479	1019

Model No.								
Standard Type	Ball circuit	Open Type	Ball circuit	Adjustable Type	Ball circuit	Weight (g)	dr (mm)	Tolerance (μm)
LME5UU	4	–	–	LME5UUAJ	4	12	5	+8
LME8UU	4	–	–	LME8UUAJ	4	20	8	0
LME12UU	4	–	–	LME12UUAJ	4	41	12	
LME16UU	4	LME16UUOP	4	LME16UUAJ	5	57	16	+9
LME20UU	5	LME20UUOP	4	LME20UUAJ	5	91	20	-1
LME25UU	6	LME25UUOP	5	LME25UUAJ	6	215	25	+11
LME30UU	6	LME30UUOP	5	LME30UUAJ	6	325	30	-1
LME40UU	6	LME40UUOP	5	LME40UUAJ	6	705	40	+13
LME50UU	6	LME50UUOP	5	LME50UUAJ	6	1130	50	-2
LME60UU	6	LME60UUOP	5	LME60UUAJ	6	2220	60	

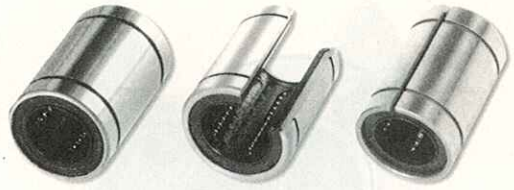

LME LME OP LME AJ

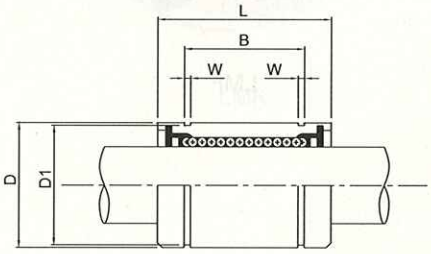

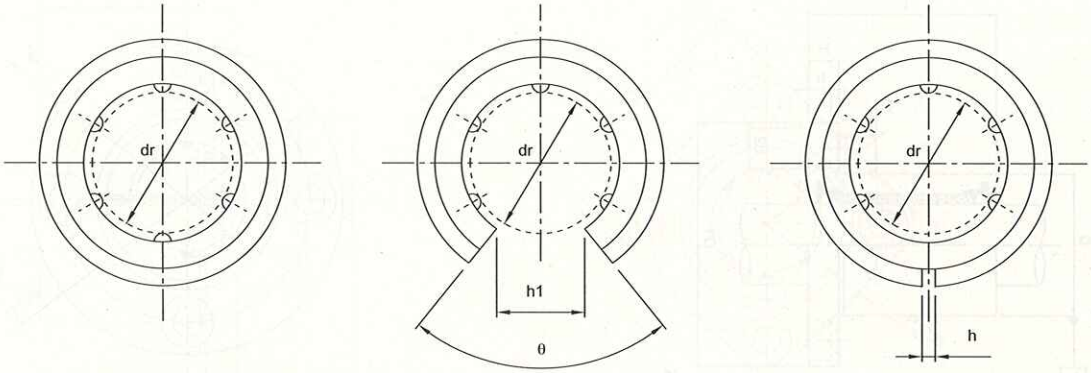

Nominal Part No	Main Dimensions and Precision (mm)											Radial clearance (max) μm	Basic Load Rating	
	D (mm)	Tolerance (μm)	L (mm)	Tolerance (μm)	B (mm)	Tolerance (μm)	W (mm)	D1 (mm)	h (mm)	h1 (mm)	θ		Dynamic C	Static CO
LME5UU	12	0	22		14.5	0	1.1	11.5	1	-	-	-5	20	27
LME8UU	16	-8	25	0	16.5	-0.2	1.1	15.2	1	-	-	-5	27	41
LME12UU	22	0	32	-0.2	22.9		1.3	21	1.5	-	-	-7	51	78
LME16UU	26	-9	36		24.9		1.3	24.9	1.5	10	78°	-7	58	91
LME20UU	32	0	45		31.5		1.6	30.3	2	10	60°	-9	88	139
LME25UU	40	-11	58		44.1	0	1.85	37.5	2	12.5	60°	-9	100	159
LME30UU	47		68	0	52.1	-0.3	1.85	44.5	2	12.5	50°	-9	159	279
LME40UU	62	0	80	-0.3	60.6		2.15	59	3	16.8	50°	-13	219	409
LME50UU	75	-13	100		77.6		2.65	72	3	21	50°	-13	389	808
LME60UU	90	0/-15	125	0/-0.4	101.7	0/-0.4	3.15	86.5	3	27.2	54°	-16	479	1019

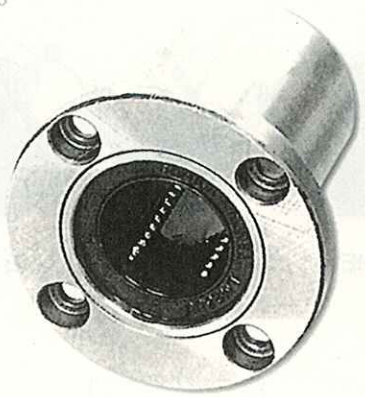

LMF

Model No.				Basic Load Rating(kgf)			
Round Flange Type	Ball circuit	Weight (g)	Radial clearance (max) μm	Dynamic C	Static CO	dr (mm)	Tolerance (μm)
LMF6UU	4	26.5	-5	20	27	6	0 -9
LMF8UU	4	40	-5	27	41	8	
LMF10UU	4	78	-5	38	55	10	
LMF12UU	4	76	-5	42	60	12	
LMF13UU	4	94	-7	51	78	13	
LMF16UU	5	134	-7	78	119	16	0 -10
LMF20UU	5	180	-9	88	140	20	
LMF25UU	6	340	-9	100	159	25	
LMF30UU	6	460	-9	159	279	30	
LMF35UU	6	795	-13	169	319	35	0 -12
LMF40UU	6	1054	-13	219	409	40	
LMF50UU	6	2200	-13	389	808	50	
LMF60UU	6	2960	-13	479	1019	60	0/-15

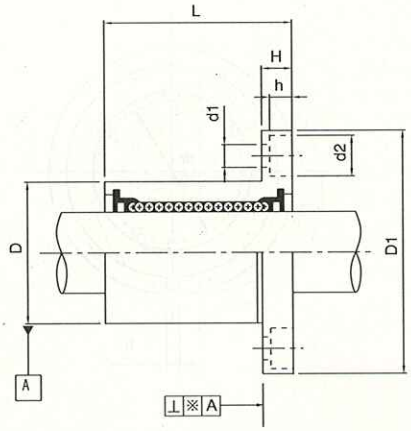

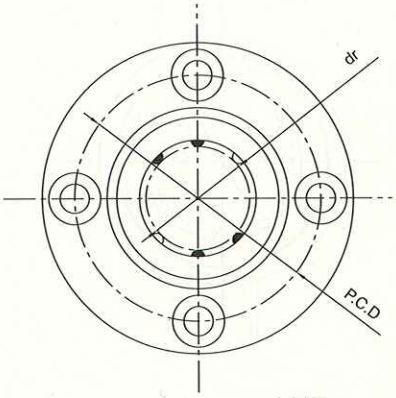

LMF

Nominal Part No	Main Dimensions and Precision (mm)								Right Angle ※ (μm)	d1 × d2 × h
	D (mm)	Tolerance (μm)	L (mm)	Tolerance (μm)	D1 (mm)	Tolerance (μm)	H	PCD		
LMF6UU	12	0 -11	19	0 -0.2	28	0 -0.2	5	20	12	3.4 × 6.5 × 3.3
LMF8UU	15		24		32		5	24	12	3.4 × 6.5 × 3.3
LMF10UU	19	0 -13	29		40		6	29	12	4.5 × 8 × 4.4
LMF12UU	21		30		42		6	32	12	4.5 × 8 × 4.4
LMF13UU	23		32		43		6	33	12	4.5 × 8 × 4.4
LMF16UU	28		37		48		6	38	12	.4.5 × 8 × 4.4
LMF20UU	32	0 -16	42		54		8	43	15	5.5 × 9.5 × 5.4
LMF25UU	40		59	0 -0.3	62		8	51	15	5.5 × 9.5 × 5.4
LMF30UU	45		64		74		10	60	15	6.6 × 11 × 6.5
LMF35UU	52	0 -19	70		82		10	67	20	6.6 × 11 × 6.5
LMF40UU	60		80		96	0 -0.3	13	78	20	9 × 14 × 8.6
LMF50UU	80		100		116		13	98	20	9 × 14 × 8.6
LMF60UU	90	0/-22	110		134		18	112	25	11 × 17.5 × 10.8

Model No.				Basic Load Rating (kgf)			
Square Flange Type	Ball circuit	Weight (g)	Radial clearance (max) μm	Dynamic C	Static CO	dr (mm)	Tolerance (μm)
LMK6UU	4	26.5	-5	20	27	6	0 -9
LMK8UU	4	40	-5	27	41	8	
LMK10UU	4	78	-5	38	55	10	
LMK12UU	4	76	-5	42	60	12	
LMK13UU	4	94	-7	51	78	13	
LMK16UU	5	134	-7	78	119	16	0 -10
LMK20UU	5	180	-9	88	140	20	
LMK25UU	6	340	-9	100	159	25	
LMK30UU	6	460	-9	159	279	30	
LMK35UU	6	795	-13	169	319	35	0 -12
LMK40UU	6	1054	-13	219	409	40	
LMK50UU	6	2200	-13	389	808	50	
LMK60UU	6	2960	-13	479	1019	60	0/-15

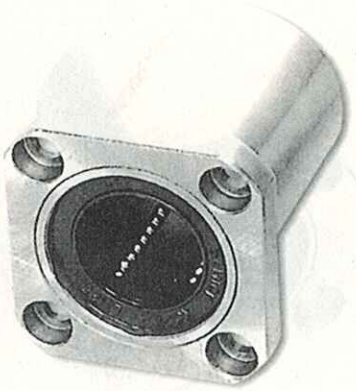

LMK

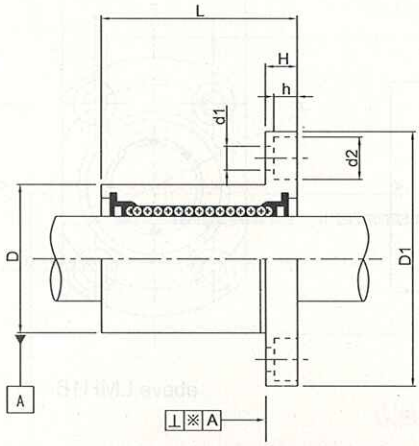

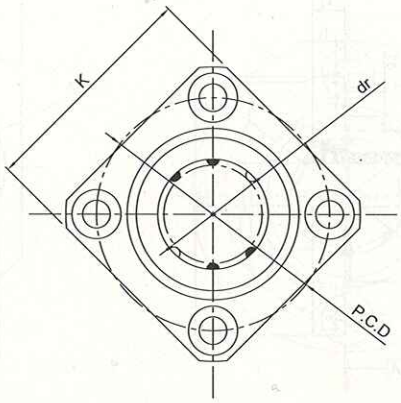

Nominal Part No	Main Dimensions and Precision (mm)									Right Angle ※ (μm)	d1 × d2 × h
	D (mm)	Tolerance (μm)	L (mm)	Tolerance (μm)	D1 (mm)	Tolerance (μm)	H	PCD	K		
LMK6UU	12	0 -11	19	0 -0.2	28	0 -0.2	5	20	22	12	3.4 × 6.5 × 3.3
LMK8UU	15		24		32		5	24	25	12	3.4 × 6.5 × 3.3
LMK10UU	19	0 -13	29		40		6	29	30	12	4.5 × 8 × 4.4
LMK12UU	21		30		42		6	32	32	12	4.5 × 8 × 4.4
LMK13UU	23		32		43		6	33	34	12	4.5 × 8 × 4.4
LMK16UU	28		37		48		6	38	37	12	4.5 × 8 × 4.4
LMK20UU	32	0 -16	42		54		8	43	42	15	5.5 × 9.5 × 5.4
LMK25UU	40		59	0 -0.3	62		8	51	50	15	5.5 × 9.5 × 5.4
LMK30UU	45		64		74		10	60	58	15	6.6 × 11 × 6.5
LMK35UU	52	0 -19	70		82		10	67	64	20	6.6 × 11 × 6.5
LMK40UU	60		80		96	0 -0.3	13	78	75	20	9 × 14 × 8.6
LMK50UU	80		100		116		13	98	92	20	9 × 14 × 8.6
LMK60UU	90	0/-22	110		134		18	112	106	25	11 × 17.5 × 10.8

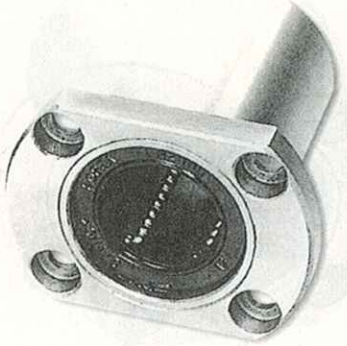

LMH

Model No.				Basic Load Rating (kgf)			
Round Flange Type	Ball circuit	Weight (g)	Radial clearance (max) μm	Dynamic C	Static CO	dr (mm)	Tolerance (μm)
LMH6UU	4	26.5	-5	20	27	6	0 -9
LMH8UU	4	40	-5	27	41	8	
LMH10UU	4	78	-5	38	55	10	
LMH12UU	4	76	-5	42	60	12	
LMH13UU	4	94	-7	51	78	13	
LMH16UU	5	134	-7	78	119	16	0 -10
LMH20UU	5	180	-9	88	140	20	
LMH25UU	6	340	-9	100	159	25	
LMH30UU	6	460	-9	159	279	30	

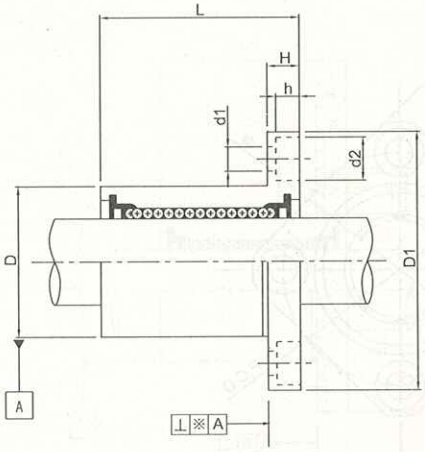

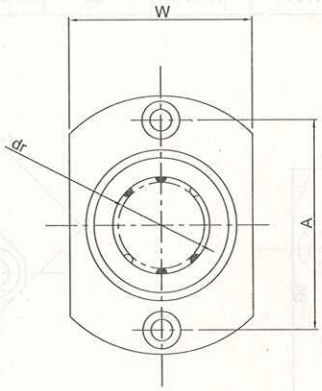

LMH13 below

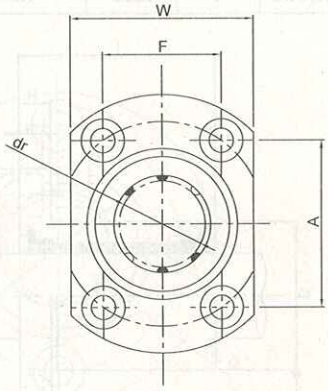

above LMH16

Nominal Part No	Main Dimensions and Precision (mm)										Right Angle ※ (μm)	d1 × d2 × h
	D (mm)	Tolerance (μm)	L (mm)	Tolerance (μm)	D1 (mm)	Tolerance (μm)	H	W	A	F		
LMH6UU	12	0 -11	19	0 -0.2	28	0 -0.2	5	18	20	-	12	3.4 × 6.5 × 3.3
LMH8UU	15		24		32		5	21	24	-	12	3.4 × 6.5 × 3.3
LMH10UU	19	0 -13	29		39		6	25	29	-	12	4.5 × 8 × 4.4
LMH12UU	21		30		42		6	27	32	-	12	4.5 × 8 × 4.4
LMH13UU	23		32		43		6	29	33	-	12	4.5 × 8 × 4.4
LMH16UU	28		37		48		6	34	31	22	12	4.5 × 8 × 4.4
LMH20UU	32	0 -16	42	0 -0.3	54		8	38	36	24	15	5.5 × 9.5 × 5.4
LMH25UU	40		59		62		8	46	40	32	15	5.5 × 9.5 × 5.4
LMH30UU	45		64		74		10	51	49	35	15	6.6 × 11 × 6.5

Model No.				Basic Load Rating (kgf)			
Round Flange Type	Ball circuit	Weight (g)	Radial clearance (max) μm	Dynamic C	Static CO	dr (mm)	Tolerance (μm)
LMF6LUU	4	31	-5	32	53	6	0 -10
LMF8LUU	4	53	-5	44	80	8	
LMF10LUU	4	105	-5	59	112	10	
LMF12LUU	4	100	-5	66	122	12	
LMF13LUU	4	130	-7	83	160	13	
LMF16LUU	5	187	-7	125	240	16	0 -12
LMF20LUU	5	260	-9	143	280	20	
LMF25LUU	6	515	-9	159	320	25	
LMF30LUU	6	655	-9	254	560	30	
LMF35LUU	6	970	-13	270	660	35	0 -15
LMF40LUU	6	1560	-13	350	820	40	
LMF50LUU	6	3500	-13	620	1622	50	
LMF60LUU	6	4500	-13	780	2040	60	0/-20

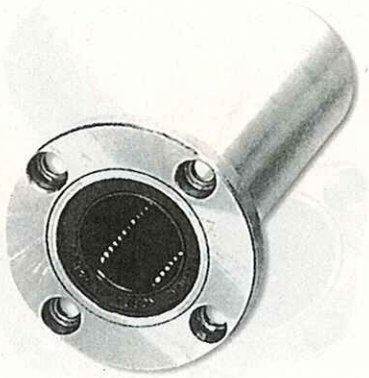

LMF L

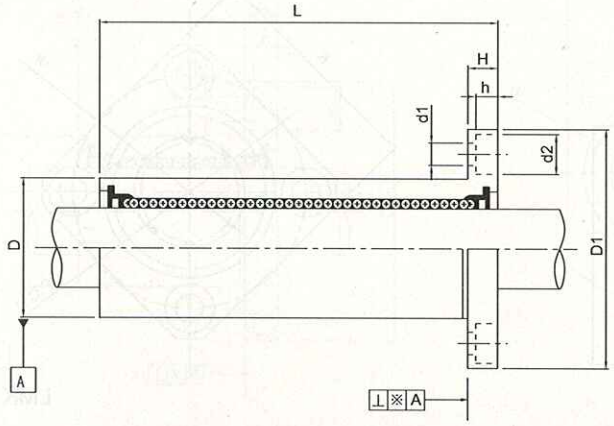

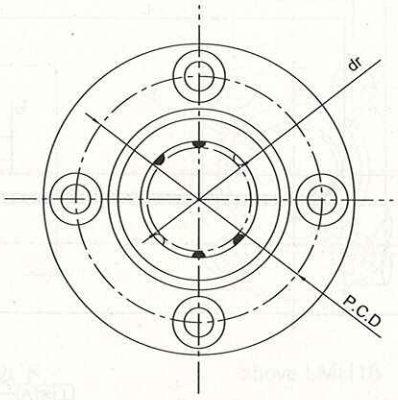

Nominal Part No	Main Dimensions and Precision (mm)								Right Angle ※ (μm)	d1 × d2 × h
	D (mm)	Tolerance (μm)	L (mm)	Tolerance (μm)	D1 (mm)	Tolerance (μm)	H	PCD		
LMF6LUU	12	0 -13	35	0 -0.3	28	0 -0.2	5	20	15	3.4 × 6.5 × 3.3
LMF8LUU	15		45		32		5	24	15	3.4 × 6.5 × 3.3
LMF10LUU	19	0 -16	55		40		6	29	15	4.5 × 8 × 4.4
LMF12LUU	21		57		42		6	32	15	4.5 × 8 × 4.4
LMF13LUU	23		61		43		6	33	15	4.5 × 8 × 4.4
LMF16LUU	28		70		48		6	38	15	4.5 × 8 × 4.4
LMF20LUU	32	0 -19	80		54		8	43	20	5.5 × 9.5 × 5.4
LMF25LUU	40		112	0 -0.4	62		8	51	20	5.5 × 9.5 × 5.4
LMF30LUU	45		123		74		10	60	20	6.6 × 11 × 6.5
LMF35LUU	52	0 -22	135		82		10	67	25	6.6 × 11 × 6.5
LMF40LUU	60		154		96	0 -0.3	13	78	25	9 × 14 × 8.6
LMF50LUU	80		192		116		13	98	25	9 × 14 × 8.6
LMF60LUU	90	0/-25	211		134		18	112	25	11 × 17.5 × 10.8

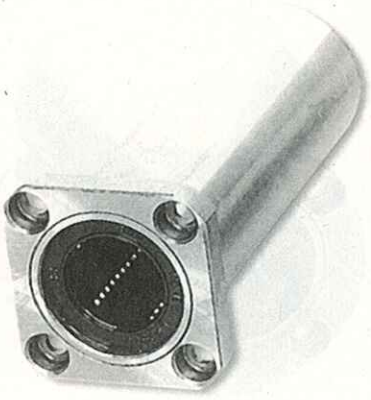

LMK L

Model No.				Basic Load Rating (kgf)			
Square Flange Type	Ball circuit	Weight (g)	Radial clearance (max) μm	Dynamic C	Static CO	dr (mm)	Tolerance (μm)
LMK6LUU	4	31	-5	32	53	6	0 -10
LMK8LUU	4	53	-5	44	80	8	
LMK10LUU	4	105	-5	59	112	10	
LMK12LUU	4	100	-5	66	122	12	
LMK13LUU	4	130	-7	83	160	13	
LMK16LUU	5	187	-7	125	240	16	
LMK20LUU	5	260	-9	143	280	20	0 -12
LMK25LUU	6	515	-9	159	320	25	
LMK30LUU	6	655	-9	254	560	30	
LMK35LUU	6	970	-13	270	660	35	0 -15
LMK40LUU	6	1560	-13	350	820	40	
LMK50LUU	6	3500	-13	620	1622	50	
LMK60LUU	6	4500	-13	780	2040	60	0/-20

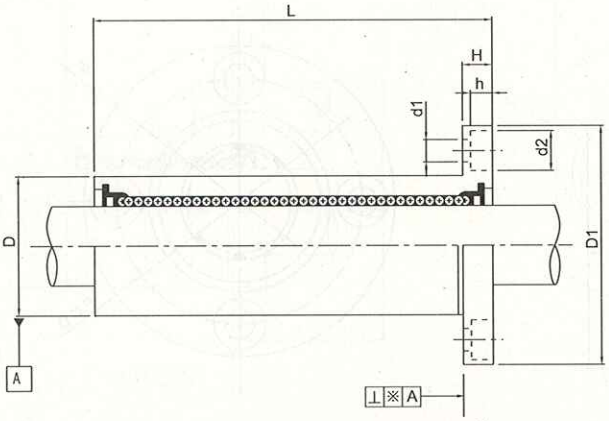

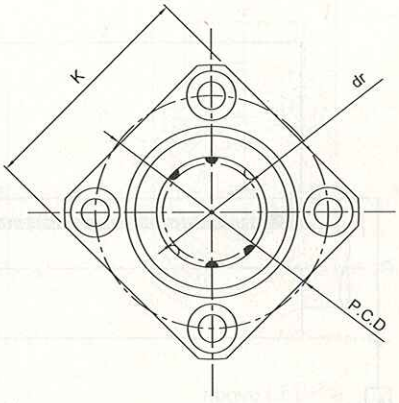

LMK L

Nominal Part No	Main Dimensions and Precision (mm)									Right Angle ※ (μm)	d1 × d2 × h
	D (mm)	Tolerance (μm)	L (mm)	Tolerance (μm)	K (mm)	Tolerance (μm)	D1	H	PCD		
LMK6LUU	12	0 -13	35	0 -0.3	22	0 -0.2	28	5	20	15	3.4 × 6.5 × 3.3
LMK8LUU	15		45		25		32	5	24	15	3.4 × 6.5 × 3.3
LMK10LUU	19	0 -16	55		30		40	6	29	15	4.5 × 8 × 4.4
LMK12LUU	21		57		32		42	6	32	15	4.5 × 8 × 4.4
LMK13LUU	23		61		34		43	6	33	15	4.5 × 8 × 4.4
LMK16LUU	28		70		37		48	6	38	15	4.5 × 8 × 4.4
LMK20LUU	32	0 -19	80		42		54	8	43	20	5.5 × 9.5 × 5.4
LMK25LUU	40		112	0 -0.4	50		62	8	51	20	5.5 × 9.5 × 5.4
LMK30LUU	45		123		58		74	10	60	20	6.6 × 11 × 6.5
LMK35LUU	52	0 -22	135		64		82	10	67	25	6.6 × 11 × 6.5
LMK40LUU	60		154		75	0 -0.3	96	13	78	25	9 × 14 × 8.6
LMK50LUU	80		192		92		116	13	98	25	9 × 14 × 8.6
LMK60LUU	90	0/-25	211		106		134	18	112	25	11 × 17.5 × 10.8

Model No.				Basic Load Rating (kgf)			
Round Flange Type	Ball circuit	Weight (g)	Radial clearance (max) μm	Dynamic C	Static CO	dr (mm)	Tolerance (μm)
LMH6LUU	4	31	-5	32	53	6	0 -10
LMH8LUU	4	53	-5	44	80	8	
LMH10LUU	4	105	-5	59	112	10	
LMH12LUU	4	100	-5	66	122	12	
LMH13LUU	4	130	-7	83	160	13	
LMH16LUU	5	187	-7	125	240	16	
LMH20LUU	5	260	-9	143	280	20	0 -12
LMH25LUU	6	515	-9	159	320	25	
LMH30LUU	6	655	-9	254	560	30	

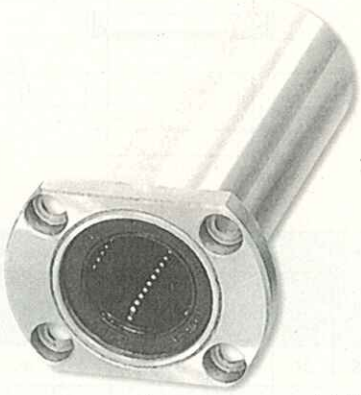

LMH L

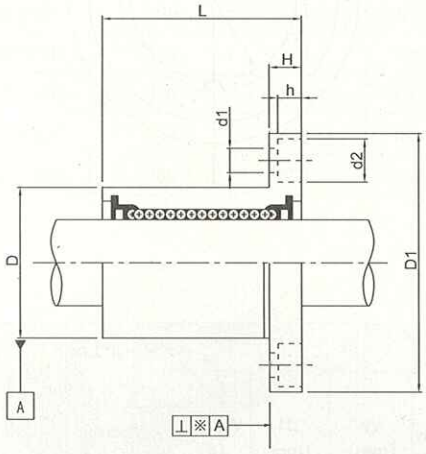

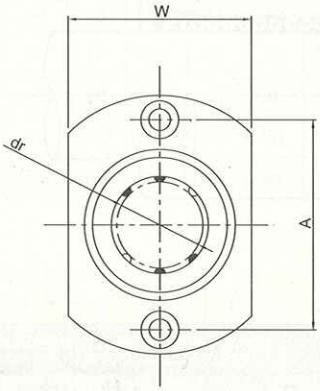

LMH13以下

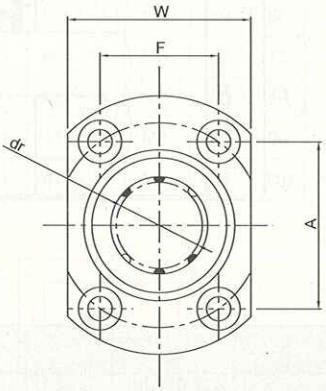

above LMH16

Nominal model No	Main Dimensions and Precision (mm)										Right Angle ※ (μm)	d1 × d2 × h
	D (mm)	Tolerance (μm)	L (mm)	Tolerance (μm)	D1 (mm)	Tolerance (μm)	H	W	A	F		
LMH6LUU	12	0 -13	35	0 -0.3	28	0 -0.2	5	18	20	-	15	3.4 × 6.5 × 3.3
LMH8LUU	15		45		32		5	21	24	-	15	3.4 × 6.5 × 3.3
LMH10LUU	19	0 -16	55		39		6	25	29	-	15	4.5 × 8 × 4.4
LMH12LUU	21		57		42		6	27	32	-	15	4.5 × 8 × 4.4
LMH13LUU	23		61		43		6	29	33	-	15	4.5 × 8 × 4.4
LMH16LUU	28		70		48		6	34	31	22	15	4.5 × 8 × 4.4
LMH20LUU	32	0 -19	80		54		8	38	36	24	20	5.5 × 9.5 × 5.4
LMH25LUU	40		112	0 -0.4	62		8	46	40	32	20	5.5 × 9.5 × 5.4
LMH30LUU	45		123		74		10	51	49	35	20	6.6 × 11 × 6.5

LM L

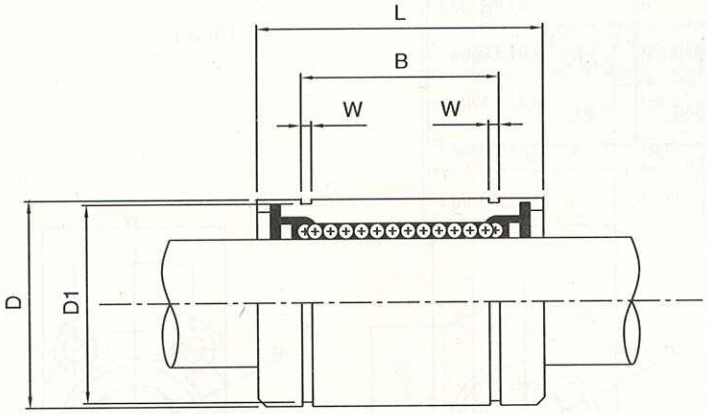

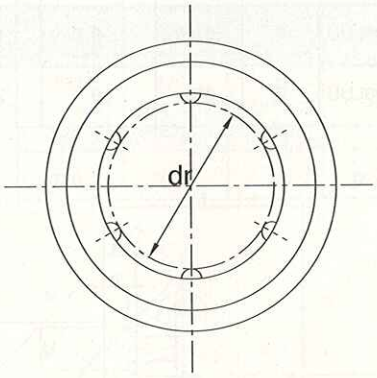

Model No.													Basic Load Rating (kgf)	
Standard Type	Ball circuit	dr		D		L		B		W (mm)	D1 (mm)	Weight (g)	Dynamic C	Static CO
		(mm)	Tolerance (μm)	(mm)	Tolerance (μm)	(mm)	Tolerance (μm)	(mm)	Tolerance (μm)					
LM6LUU	4	6	0 -10	12	0 -13	35	0 -0.3	27	0 -0.3	1.1	11.5	16	32	53
LM8LUU	4	8		15		45		35		1.1	14.3	31	44	80
LM10LUU	4	10		19	0 -16	55		44		1.3	18	62	59	112
LM12LUU	4	12		21		57		46		1.3	20	80	66	122
LM13LUU	4	13		23		61		46		1.3	22	90	83	160
LM16LUU	5	16		28		70		53		1.6	27	145	125	240
LM20LUU	5	20	0 -12	32	0 -19	80		61		1.6	30.5	180	143	280
LM25LUU	6	25		40		112	0 -0.4	82	0 -0.4	1.85	38	440	159	320
LM30LUU	6	30		45		123		89		1.85	43	580	254	560
LM35LUU	6	35	0 -15	52	0 -22	135		99		2.1	49	795	270	660
LM40LUU	6	40		60		154		121		2.1	57	1170	350	820
LM50LUU	6	50		80		192		148		2.6	76.5	3100	620	1622
LM60LUU	6	60	0/-20	90	0/-25	211		170		3.15	86.5	3500	780	2040

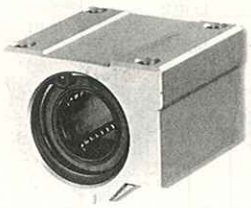

SC

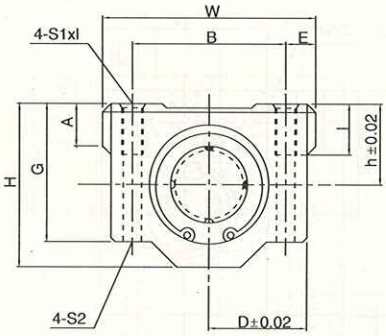

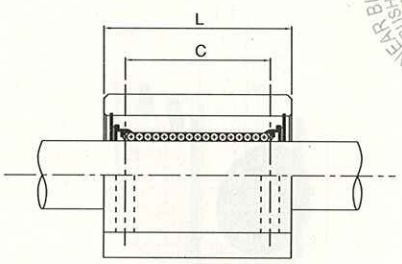

Standard Type				Main Dimensions (mm)											
Model No.	Basic Load Rating (kgf)		Weight (g)	h	D	W	H	G	A	B	E	$S_1 \times \ell$	S2	C	L
	Dynamic C	Static CO													
SC6UU	20	27	34	9	15	30	18	15	6	20	5	M4 × 8	M3	15	25
SC8UU	27	41	56	11	17	34	22	18	6	24	5	M4 × 8	M3	18	30
SC10UU	38	55	90	13	20	40	26	21	8	28	6	M5 × 12	M4	21	35
SC12UU	42	60	112	15	21	42	29	25	8	30.5	5.75	M5 × 12	M4	26	36
SC13UU	51	78	123	15	22	44	30	26	8	33	5.5	M5 × 12	M4	26	39
SC16UU	78	119	189	19	25	50	38.5	35	9	36	7	M5 × 12	M4	34	44
SC20UU	88	140	237	21	27	54	42	36	11	40	7	M6 × 12	M5	40	50
SC25UU	100	159	555	26	38	76	51.5	41	12	54	11	M8 × 18	M6	50	67
SC30UU	159	279	685	30	39	78	59.5	49	15	58	10	M8 × 18	M6	58	72
SC35UU	169	319	1100	34	45	90	68	54	18	70	10	M8 × 18	M6	60	80
SC40UU	219	409	1600	40	51	102	78	62	20	80	11	M10 × 25	M8	60	90
SC50UU	389	808	3350	52	61	122	102	80	25	100	11	M10 × 25	M8	80	110

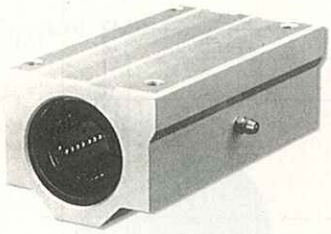

SC-L

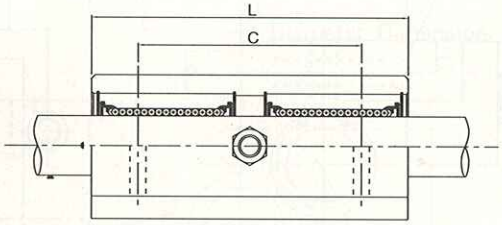

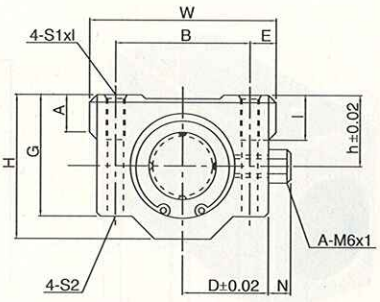

Standard Type				Main Dimensions (mm)												
Model No.	Basic Load Rating (kgf)		Weight (g)	h	D	W	H	G	A	B	E	$S_1 \times \ell$	S2	C	L	N
	Dynamic C	Static CO														
SC8LUU	42	82	94	11	17	34	22	18	6	24	5	M4 × 8	M3	42	58	7
SC10LUU	60	110	147	13	20	40	26	21	8	28	6	M5 × 12	M4	46	68	7
SC12LUU	66	120	220	15	21	42	29	25	8	30.5	5.75	M5 × 12	M4	50	70	6.5
SC13LUU	82	157	245	15	22	44	30	26	8	33	5.5	M5 × 12	M4	50	75	6.5
SC16LUU	125	238	376	19	25	50	38.5	35	9	36	7	M5 × 12	M4	60	85	6
SC20LUU	140	280	476	21	27	54	42	36	11	40	7	M6 × 12	M5	70	96	7
SC25LUU	159	318	1115	26	38	76	51.5	41	12	54	11	M8 × 18	M6	100	130	4
SC30LUU	254	559	1375	30	39	78	59.5	49	15	58	10	M8 × 18	M6	110	140	6
SC35LUU	270	638	2200	34	45	90	68	54	18	70	10	M8 × 18	M6	120	155	5.5
SC40LUU	350	818	3200	40	51	102	78	62	20	80	11	M10 × 25	M8	140	175	5
SC50LUU	623	1618	6720	52	61	122	102	80	25	100	11	M10 × 25	M8	160	215	5

SH

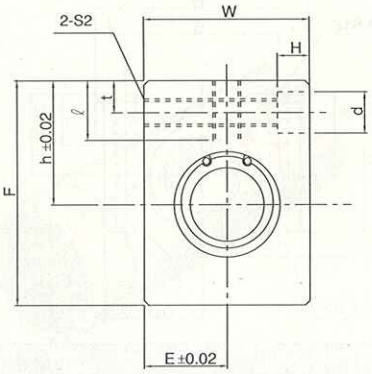

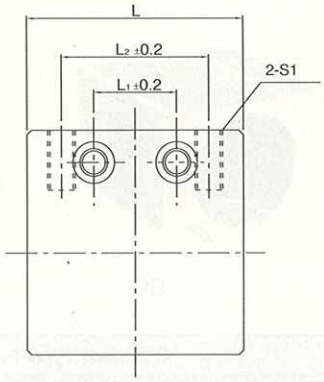

Standard Type				Main Dimensions (mm)												
Model No.	Basic Load Rating (kgf)		Weight (g)	h	E	W	L	F	L_2	S_1	ℓ	L_1	t	S2	d	H
	Dynamic C	Static CO														
SH6UU	21	27	21.5	14	8	16	27	22	18	M4	8	9	5	M4	6	5
SH8UU	28	40	40	16	10	20	32	26	20	M5	8.5	10	5	M4	6	5
SH10UU	38	56	80	19	13	26	39	32	27	M6	9.5	15	6	M5	8	6
SH12UU	52	80	90	20	14	28	40	34	27	M6	9.5	15	6	M5	8	6
SH13UU	52	80	132	25	15	30	42	43	28	M6	13.5	16	7	M6	9	7
SH16UU	79	120	204	27	18	36	47	49	32	M6	13	18	7	M6	9	7
SH20UU	90	140	272	31	21	42	52	54	36	M8	15	18	8	M8	11	8
SH25UU	100	160	574	37	26	52	69	65	42	M10	17	22	9	M10	14	10
SH30UU	160	280	710	40	29	58	74	71	44	M10	17.5	22	9	M10	14	10

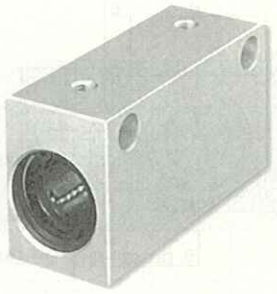

SHL

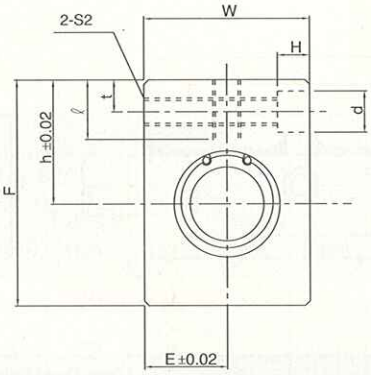

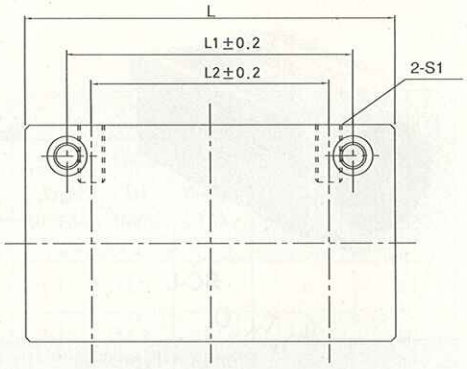

Standard Type				Main Dimensions (mm)												
Model No.	Basic Load Rating (kgf)		Weight (g)	h	E	W	L	F	L_2	S_1	ℓ	L_1	t	S2	d	H
	Dynamic C	Static CO														
SH6LUU	33	54	40	14	8	16	46	22	20	M4	8	30	5	M4	6	5
SH8LUU	44	80	75	16	10	20	56	26	30	M5	8.5	42	5	M4	6	5
SH10LUU	60	112	150	19	13	26	68	32	36	M6	9.5	50	6	M5	8	6
SH12LUU	83	160	168	20	14	28	70	34	36	M6	9.5	50	6	M5	8	6
SH13LUU	83	160	248	25	15	30	74	43	42	M6	13.5	55	7	M6	9	7
SH16LUU	125	240	383	27	18	36	84	49	52	M6	13	65	7	M6	9	7
SH20LUU	143	280	520	31	21	42	94	54	58	M8	15	70	8	M8	11	8
SH25LUU	159	320	1120	37	26	52	128	65	80	M10	17	100	9	M10	14	10
SH30LUU	254	560	1384	40	29	58	138	71	90	M10	17.5	110	9	M10	14	10

SMH

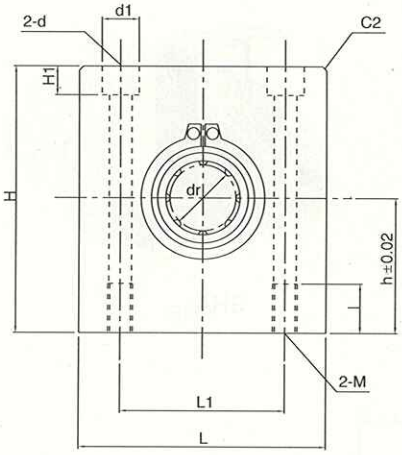

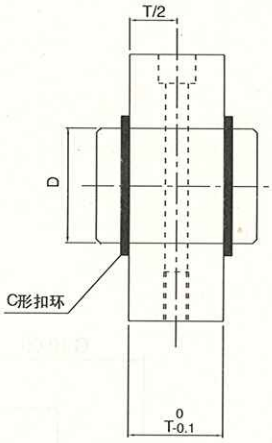

Model No.	Main Dimensions (mm)										To Fit Accessory Screw	To Fit Installing Screw
	dr	h	L	T	H	D	L1	d	d1 × H1	M × ℓ		
SMH12	12	25	52	20	50	21	32	4.5	8 × 6	5 × 10	M4	M5
SMH13	13	25	52	20	50	23	32	4.5	8 × 6	5 × 10	M4	M5
SMH16	16	33	60	23	65	28	40	5.5	9 × 7	6 × 12	M5	M6
SMH20	20	33	65	27	65	32	45	5.5	9 × 7	6 × 12	M5	M6
SMH25	25	38	75	37	75	40	54	6.6	11 × 8	8 × 16	M6	M8
SMH30	30	38	85	40	75	45	60	6.6	11 × 8	8 × 16	M6	M8
SMH35	35	50	95	45	100	52	70	9	14 × 10	10 × 20	M8	M10

SMH 16

Standard SMH Type — Diameter Dimension

PL

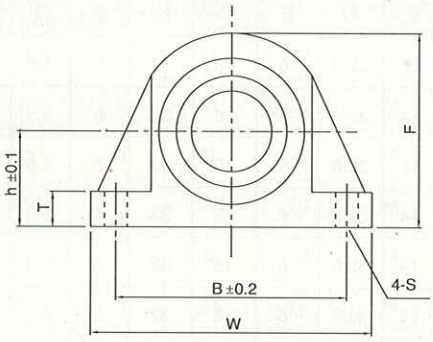

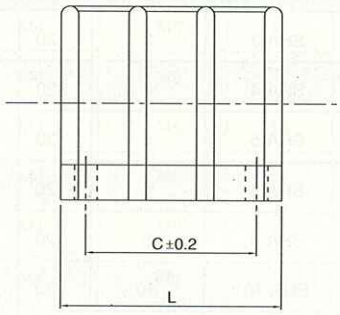

Model No.	Shaft Dimension	Main Dimensions (mm)								Basic Load Rating (kgf)		Weight (g)
		h	W	L	F	T	B	C	S	Dynamic C	Static CO	
PL12	12	15	50	36	30	6.5	40	26	4.5	52	80	50
PL16	16	19	56	44	38.5	7	46	34	4.5	80	120	99
PL20	20	21	62	50	43	8	50	40	5.5	90	140	127

PL 20

Standard SMH Type — Diameter Dimension

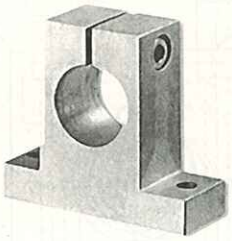

SHA

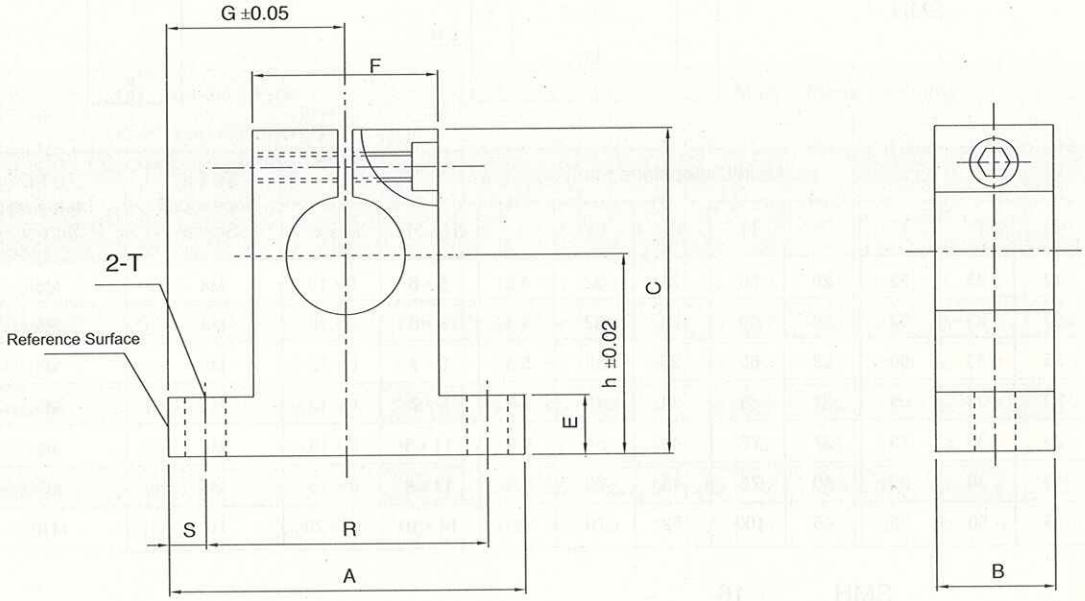

Model No.	Shaft	Main Dimensions (mm)										To Fit Accessory Screw	To Fit Installing Screw	Weight (g)
		h	G	A	B	C	E	F	R	S	T			
SHA-3	3	20	21	42	14	32.8	6	18	32	5	5.5	M4	M5	24
SHA-4	4	20	21	42	14	32.8	6	18	32	5	5.5	M4	M5	24
SHA-5	5	20	21	42	14	32.8	6	18	32	5	5.5	M4	M5	24
SHA-6	6	20	21	42	14	32.8	6	18	32	5	5.5	M4	M5	24
SHA-8	8	20	21	42	14	32.8	6	18	32	5	5.5	M4	M5	24
SHA-10	10	20	21	42	14	32.8	6	18	32	5	5.5	M4	M5	24
SHA-12	12	23	21	42	14	37.5	6	20	32	5	5.5	M4	M5	30
SHA-13	13	23	21	42	14	37.5	6	20	32	5	5.5	M4	M5	30
SHA-16	16	27	24	48	16	44	8	25	38	5	5.5	M4	M5	40
SHA-20	20	31	30	60	20	51	10	30	45	7.5	6.6	M5	M6	70
SHA-25	25	35	35	70	24	60	12	38	56	7	6.6	M6	M6	130
SHA-30	30	42	42	84	28	70	12	44	64	10	9	M6	M8	180
SHA-35	35	50	49	98	32	82	15	50	74	12	11	M8	M10	270
SHA-40	40	60	57	114	36	96	15	60	90	12	11	M8	M10	420
SHA-50	50	70	63	126	40	120	18	74	100	13	14	M12	M12	750

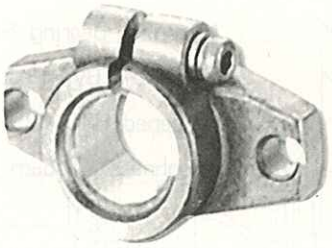

SHF

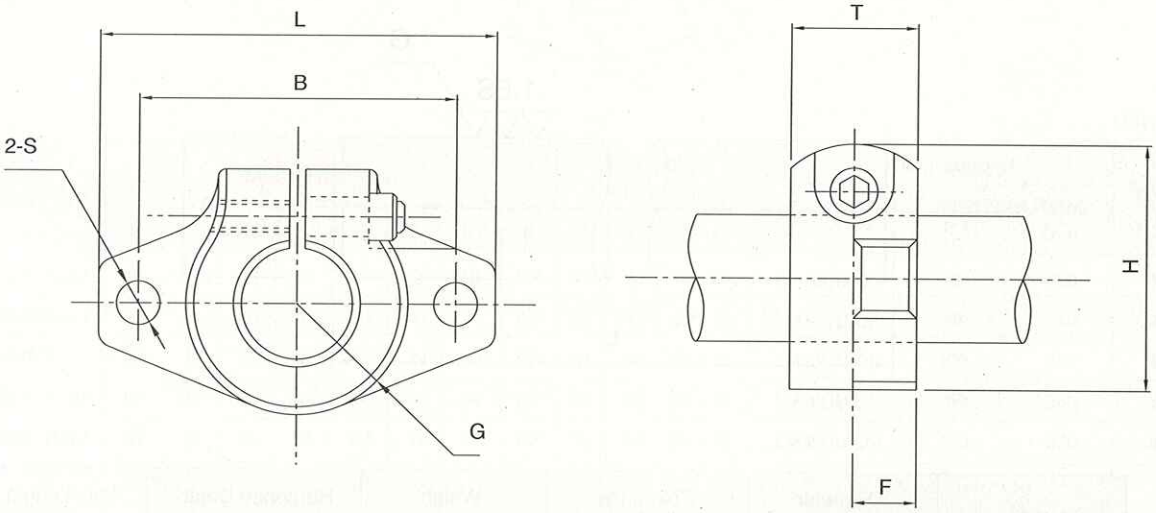

Model No.	Shaft	Main Dimensions (mm)							To Fit Accessory Screw	To Fit Installing Screw	Weight (g)
		L	T	F	B	G	H	S			
SHF-3	3	43	10	5	32	20	24	5.5	M4	M5	13
SHF-4	4	43	10	5	32	20	24	5.5	M4	M5	13
SHF-5	5	43	10	5	32	20	24	5.5	M4	M5	13
SHF-6	6	43	10	5	32	20	24	5.5	M4	M5	13
SHF-8	8	43	10	5	32	20	24	5.5	M4	M5	13
SHF-10	10	43	10	5	32	20	24	5.5	M4	M5	13
SHF-12	12	47	13	7	36	25	28	5.5	M4	M5	20
SHF-13	13	47	13	7	36	25	28	5.5	M4	M5	20
SHF-16	16	50	16	8	40	28	31	5.5	M4	M5	27
SHF-20	20	60	20	8	48	34	37	7	M5	M6	40
SHF-25	25	70	25	10	56	40	42	7	M5	M6	60
SHF-30	30	80	30	12	64	46	50	9	M6	M8	110
SHF-35	35	92	35	14	72	50	58	12	M8	M10	380
SHF-40	40	102	40	16	80	56	67	12	M10	M10	510
SHF-50	50	122	50	19	96	70	83	14	M12	M12	890

SME

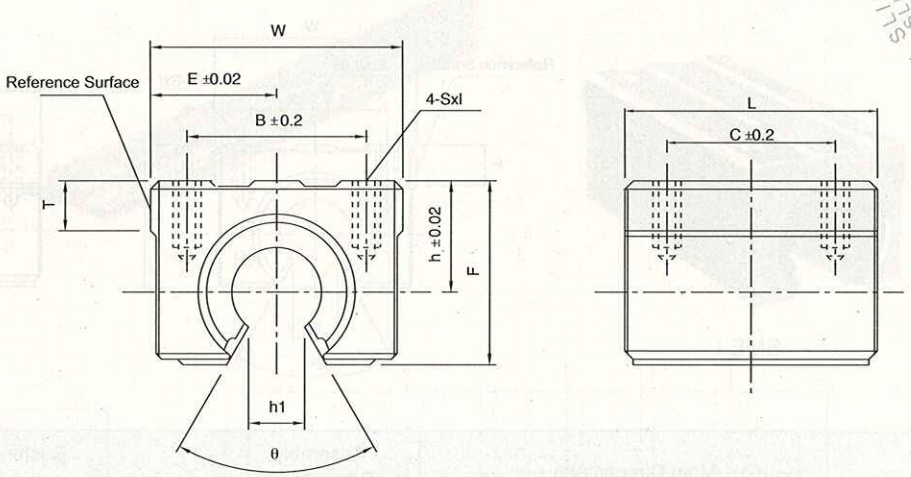

Unit: mm

Model No.	Main Dimensions								Assembly Dimensions			Bushing Support			Weight (g)
	h	E	W	L	F	T	h1	θ	B	C	S × ℓ	Model No.	Basic Load Rating (C)	(CO)	
SME16UU	20	22.5	45	45	33	9	10	80°	32	30	M5 × 12	LM16UU-OP	79	120	150
SME20UU	23	24	48	50	39	11	10	60°	35	35	M6 × 12	LM20UU-OP	90	140	200
SME25UU	27	30	60	65	47	14	11.5	50°	40	40	M6 × 12	LM25UU-OP	100	160	450
SME30UU	33	35	70	70	56	15	14	50°	50	50	M8 × 18	LM30UU-OP	160	280	630
SME35UU	37	40	80	80	63	18	16	50°	55	55	M8 × 18	LM35UU-OP	170	320	925

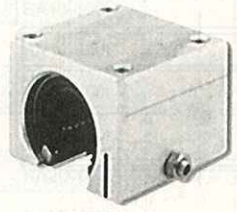

SMY

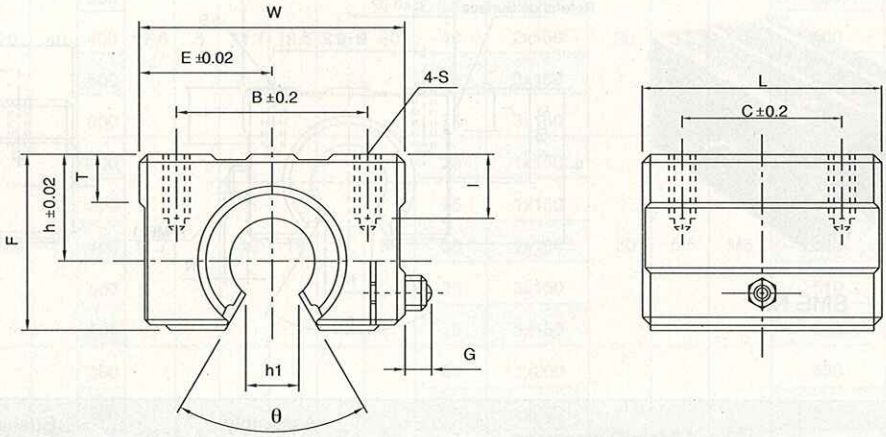

Unit: mm

Shaft	Model No.	Main Dimensions									Assembly Dimensions				Bushing Support			Weight (g)
		h	E	W	L	F	T	G	h1	θ	B	C	S	ℓ	Model No.	Basic Load Rating C	CO	
16	SMY16UU	20	25	50	45	33	9	6	10	80°	36	30	M5	12	LM 16UU-OP	79	120	1,180
20	SMY20UU	23	27	54	50	39	11	7	10	60°	40	35	M6	12	LM 20UU-OP	90	140	1,370
25	SMY25UU	27	38	76	65	47	14	7	11.5	50°	54	40	M6	12	LM 25UU-OP	100	160	1,570
30	SMY30UU	33	39	78	70	56	15	7	14	50°	58	50	M8	18	LM 30UU-OP	160	280	2,740