唐立軸承企業股份有限公司

STRUENING BEARINGS CO., LTD.

Rod End & Spherical Bearings

桿端軸承・球面軸承

公司簡介

本公司創立於 1989 年，專業生產**桿端軸承**及**球面軸承**，擁有各式金屬加工機械，富彈性的生產方式，可充分滿足客戶需求。我們的產品種類型式多，規格齊全，生產各系列標準規格，也為客戶承製專門用途的特殊樣式。

優良的品質、迅速的交期及物超所值的價格是我們的信念，本公司產品行銷世界主要工業國家，品質深獲得國內外客戶一致肯定與信賴，期待為您提供最好的服務。

產品開發

產品開發能力是我們的核心競爭力，充分的能力可為客戶開發各種萬向軸承，提供各種解決方案，協助客戶克服挑戰。

精密生產設備

- 精密 CNC/ NC 車床
- 專用成型車削機
- 精密 CNC/ NC 磨床
- 高效能油壓機
- 精密組裝模具

3Q 品質保證

通過 ISO9001 品質認證，致力追求品質的提昇。

除此之外，我們也推行 3Q 品質保證：

- 設計品質(Assurance of Design Quality)：在設計階段評估產品功能及性能
- 製造品質(Assurance of Manufacturing Quality)：製造階段確保產品品質
- 客戶品質(Assurance of Customer Quality)：以優質的產品及服務，滿足客戶的需求

Introduction

Our company was established in 1989, mainly in manufacturing rod end and spherical bearings. The firm plays as a leading role on bearing manufacture technologies in Taiwan. SB e specializes in rod end bearings, spherical bearings, link ball bearings and rod end linkages. We not only have automatized production, precise assembly, stable and high quality products, but also provide competitive price and on time delivery service.

Research and Development Ability

Our core competence is Research and Development. R&D ability has been applied to manufacture various products. Our goals of expanding mainly focus on the connecting engineering, rod end linking solutions to industrial usages and commercial consumers, and helping clients to solve the difficulties in joint connecting.

Precisely Manufacturing Processes

- Auto-feed and auto-cutting CNC/ NC lathes
- Precise CNC/ NC grinding machines
- High performance hydraulic presses
- Precise assembling molds

3Q System - Quality Assurances

Struening Bearings Co. Ltd. has been qualified the ISO 9001 certificate since 2006. Meanwhile, our quality assurance system is the fundamental basis. This consists of three main parts:

- Assurance of Design Quality (ADQ) emphasizes on function and performance review.
- Assurance of Manufacturing Quality (AMQ) includes strength and durability test.
- Assurance of Customer Quality (ACQ) centered on technical supports and satisfactions.

目　錄 / CONTENTS

- **桿端軸承 / ROD END BEARINGS**

1. PHS Series ---------- Female Type ---------- p1
2. POS Series ---------- Male Type ---------- p2
3. NHS Series ---------- Female Type ---------- p3
4. NOS Series ---------- Male Type ---------- p4
5. MHS Series ---------- Female Type ---------- p5
6. MOS Series ---------- Male Type ---------- p6
7. SI_E Series ---------- Female Type ---------- p7
8. SA_E Series ---------- Male Type ---------- p8

- **不銹鋼桿端軸承 / STAINLESS STEEL ROD END BEARINGS**

9. RBT Series ---------- Female Type ---------- p9
10. RBM Series ---------- Male Type ---------- p10

- **重力耐磨型桿端軸承 / HEAVY LOAD ROD END BEARINGS**

11. HKF Series ---------- Female Type ---------- p11
12. HKM Series ---------- Male Type ---------- p12

- **鋁合金桿端軸承 / ALLUMINUM ROD END BEARINGS**

13. AXF Series ---------- Female Type ---------- p13
14. AXM Series ---------- Male Type ---------- p14

- **球面軸承 / SPHERICAL BEARINGS**

15. PB Series / PB_T Series / PBN Series ---------- p15
16. PC Series ---------- p16
17. GE Series ---------- p17
18. GE_C Series ---------- p18

- **和尚頭軸承 / LINK BALL BEARINGS**

19. RBL Series ---------- p19
20. BI Series ---------- p20
21. BL Series ---------- p21
22. YL Series ---------- p22

- **浮動接頭軸承 / FLOATING JOINT BEARINGS**

23. FJ Series ---------- p23

- **特殊規格客製品 / OEM PRODUCTS** ---------- p24,p25

- **附錄 I / INDEX I** ---------- p26

(單位轉換表、公差表 / Conversion Factors, Tolerances Tables)

桿端軸承 / ROD END BEARING
PHS Series

嵌入組合型
特殊結構設計，鋼珠滑順，附黃油咀。
材質
·**主體:** 中碳鋼S45C，鍛造，表面鍍鋅 (Cr3+)。
·**鋼珠:** 鉻鉬軸承鋼SUJ-2，熱處理 HRC 56˚±2，鍍硬鉻 。
·**外框:** 合金銅(PHS5~PHS25, PHS3/16~PHS1") 。
·**外框:** 碳鋼+ 合金銅 (PHS30)。

Grease Fitting Type
An unique race structure design. Low clearance. Performing well in durability. A grease fitting.
MATERIALS
·**BODY:** Medium Carbon Steel S45C, Forged, Zinc Coated (Cr3+)
·**BALL:** Bearing Steel SUJ-2, Heat Treated HRC 56˚±2,Hard Chrome Plated
·**RACE:** Copper Alloy (PHS5~PHS25, PHS3/16~PHS1")

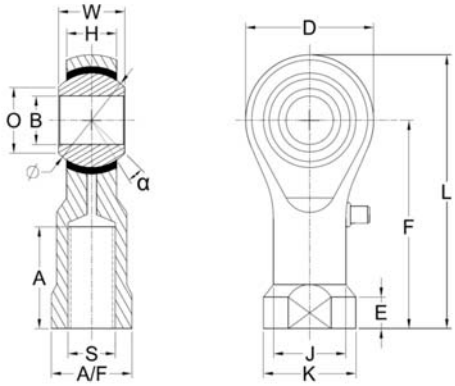

■ 間隙 (mm)
徑向間隙值：小於0.035
軸向間隙值：小於0.1

■ Clearance (Unit: mm)
Radial Clearrance:0.035 or less
Axial Clearance:0.1 or less

公 制 尺 寸 / DIMENSIONS IN METRIC mm

型 號 Model No.	B H7	W +0 -0.1	D	L	O	H +/- 0.1	A +2 -0	F	J	K	E	A/F +0 -0.3	Thread S	旋角 α	球徑 Ball Dia. Ø	徑向荷重 Radial S. load (kgf)	重量 Weight (g)
PHS 5 R/L	5	8	17	36.5	7.7	6	12	28	9	11	5	9	5x0.8	13	11.11	560	18
PHS 6 R/L	6	9	19	39	8.9	6.7	14	29.5	10	13	5	11	6x1.0	13	12.70	690	25
PHS 8 RF/LF **PHS 8 R/L**	8	12	23.5	47.5	10.4	9	17	36	13	16	5	14	8x1.0 8x1.25	13	15.88	980	48
PHS 10 RF/LF **PHS 10 R/L**	10	14	27	58	12.9	10.5	21	44.5	15	19	7	17	10x1.25 10x1.5	13	19.05	1320	77
PHS 12 RF/LF **PHS 12 R/L**	12	16	32	65	15.4	12	24	49	18	22	7	19	12x1.25 12x1.75	13	22.23	1670	123
PHS 14 RF/LF **PHS 14 R/L**	14	19	36	75	16.8	14	27	57	20	25	8	21.5	14x1.5 14x2.0	15	25.40	2060	168
PHS 16 RF/LF **PHS 16 R/L**	16	21	39	84	19.3	15	33	64.5	22	27	8	22	16x1.5 16x2.0	15	28.58	2500	212
PHS 18 R/L	18	23	43	91.5	21.8	17	36	70	25	31	10	27	18x1.5	15	31.75	2940	302
PHS 20 R/L	20	25	47	100	24.3	18	40	76.5	28	34	10	30	20x1.5	15	34.93	3430	380
PHS 22 R/L	22	28	50	108	25.9	20	43	83	30	37	12	32	22x1.5	15	38.10	4120	490
PHS 25 R/L	25	31	56	120	29.6	22	48	92	34	42	12	36	24x2.0	15	42.85	7240	665
PHS 30 R/L	30	37	68	145	34.8	26	56	111	40	50	15	41	30x2.0	15	50.80	9210	1110

英 制 尺 寸 / DIMENSIONS IN INCHES

型 號 Model No.	B H7	W +0 -0.004	D	L	O	H +/- 0.004	A +0.08 -0	F	J	K	E	A/F +0 -0.012	Thread S	旋角 α	球徑 Ball Dia. Ø	徑向荷重 Radial S. load (Lbs)	重量 Weight (Lbs)
PHS3/16 R/L	0.1875	0.312	0.669	1.437	0.303	0.236	0.472	1.102	0.354	0.433	0.157	0.354	UNF3/16-32	13	0.437	1230	0.04
PHS 1/4 R/L	0.2500	0.375	0.748	1.535	0.350	0.264	0.551	1.161	0.394	0.512	0.197	0.433	UNF 1/4-28	13	0.500	1520	0.06
PHS 5/16 R/L	0.3125	0.437	0.925	1.870	0.409	0.354	0.669	1.417	0.512	0.630	0.197	0.551	UNF 5/16-24	13	0.625	2160	0.11
PHS 3/8 R/L	0.3750	0.500	1.063	2.283	0.508	0.433	0.827	1.752	0.590	0.748	0.256	0.669	UNF 3/8-24	13	0.750	2910	0.18
PHS 7/16 R/L	0.4375	0.500	1.063	2.283	0.508	0.433	0.827	1.752	0.590	0.748	0.256	0.669	UNF 7/16-20	13	0.750	2910	0.18
PHS 1/2 R/L	0.5000	0.625	1.259	2.559	0.606	0.472	0.945	1.929	0.709	0.866	0.256	0.748	UNF 1/2-20	13	0.875	3680	0.27
PHS 5/8 R/L	0.6250	0.750	1.535	3.307	0.760	0.590	1.299	2.539	0.866	1.063	0.315	0.866	UNF 5/8-18	15	1.125	5510	0.47
PHS 3/4 R/L	0.7500	0.875	1.692	3.602	0.858	0.669	1.417	2.756	0.984	1.220	0.394	1.063	UNF 3/4-16	15	1.250	7560	0.67

桿端軸承 / ROD END BEARING
POS Series

嵌入組合型
特殊結構設計，鋼珠滑順，附黃油咀。
材質
·**主體:** 中碳鋼S45C，鍛造，表面鍍鋅(Cr3+)。
·**鋼珠:** 鉻鉬軸承鋼SUJ-2，熱處理 HRC 56˚±2，鍍硬鉻。
·**外框:** 合金銅(POS5~POS25, POS3/16~POS1") 。
·**外框:** 碳鋼+ 合金銅 (POS30)。

Grease Fitting Type
An unique race structure design. Low clearance. Performing well in durability. A grease fitting.
MATERIALS
·**BODY:** Medium Carbon Steel S45C, Forged, Zinc Coated (Cr3+)
·**BALL:** Bearing Steel SUJ-2, Heat Treated HRC 56˚±2,Hard Chrome Plated
·**RACE:** Copper Alloy (POS5~PHS25, POS3/16~POS1")

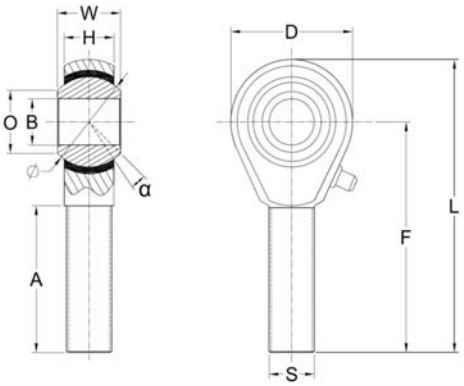

■ 間隙 (mm)
徑向間隙值：小於0.035
軸向間隙值：小於0.1

■ Clearance (Unit: mm)
Radial Clearrance:0.035 or less
Axial Clearance:0.1 or less

公 制 尺 寸 / DIMENSIONS IN METRIC mm

型 號 Model No.	B H7	W +0 -0.1	D	L	O	H +/- 0.1	A +2 -0	F	Thread S	旋角 α	球徑 Ball Dia. Ø	徑向荷重 Radial S. load (kgf)	重量 Weight (g)
POS 5 R/L	5	8	17	43.5	7.7	6	22	35	5x0.8	13	11.11	340	14
POS 6 R/L	6	9	19	47.5	8.9	6.7	24	38	6x1.0	13	12.70	480	21
POS 8 RF/LF **POS 8 R/L**	8	12	23.5	55.5	10.4	9	26	44	8x1.0 8x1.25	13	15.88	680	41
POS 10 RF/LF **POS 10 R/L**	10	14	27	63.5	12.9	10.5	30	50	10x1.25 10x1.5	13	19.05	1070	65
POS 12 RF/LF **POS 12 R/L**	12	16	32	72	15.4	12	35	56	12x1.25 12x1.75	13	22.23	1650	100
POS 14 RF/LF **POS 14 R/L**	14	19	36	81	16.8	14	37	63	14x1.5 14x2.0	15	25.40	2040	146
POS 16 RF/LF **POS 16 R/L**	16	21	39	91.5	19.3	15	43	72	16x1.5 16x2.0	15	28.58	2470	195
POS 18 R/L	18	23	44	97	21.8	17	46	75	18x1.5	15	31.75	2910	270
POS 20 R/L	20	25	47	104	24.3	18	48	80.5	20x1.5	15	34.93	3390	345
POS 22 R/L	22	28	50	109	25.9	20	51	84	22x1.5	15	38.10	4070	455
POS 25 R/L	25	31	56	122	29.6	22	57	94	24x2.0	15	42.85	7170	590
POS 30 R/L	30	37	68	146.5	34.8	26	66	112.5	30x2.0	15	50.80	9120	1060

英 制 尺 寸 / DIMENSIONS IN INCHES

型 號 Model No.	B H7	W +0 -0.004	D	L	O	H +/- 0.004	A +0.08 -0	F	Thread S	旋角 α	球徑 Ball Dia. Ø	徑向荷重 Radial S. load (Lbs)	重量 Weight (Lbs)
POS 3/16 R/L	0.1875	0.312	0.669	1.713	0.303	0.236	0.866	1.378	UNF 3/16-32	13	0.437	750	0.03
POS 1/4 R/L	0.2500	0.375	0.748	1.870	0.350	0.264	0.945	1.496	UNF 1/4-28	13	0.500	1060	0.05
POS 5/16 R/L	0.3125	0.437	0.925	2.185	0.409	0.354	1.024	1.732	UNF 5/16-24	13	0.625	1500	0.09
POS 3/8 R/L	0.3750	0.500	1.063	2.500	0.508	0.413	1.181	1.969	UNF 3/8-24	13	0.750	2360	0.14
POS 7/16 R/L	0.4375	0.500	1.063	2.500	0.508	0.413	1.181	1.969	UNF 7/16-20	13	0.750	2360	0.14
POS 1/2 R/L	0.5000	0.625	1.260	2.835	0.606	0.472	1.378	2.205	UNF 1/2-20	13	0.875	3640	0.22
POS 5/8 R/L	0.6250	0.750	1.535	3.602	0.760	0.591	1.693	2.835	UNF 5/8-18	15	1.125	5450	0.43
POS 3/4 R/L	0.7500	0.875	1.732	3.819	0.858	0.669	1.811	2.953	UNF 3/4-16	15	1.250	7470	0.60

桿端軸承 / ROD END BEARING
NHS Series

鐵氟龍耐磨型
採用超耐磨襯套材料 (PTFE)，免給油耐磨設計，精密無間隙，必須微調間距之場所最合適。

材　質
- **主體：**中碳鋼S45C，鍛造，表面鍍鋅 (Cr3+)。
- **鋼珠：**鉻鉬軸承鋼SUJ-2， 熱處理 HRC 56°±2，鍍硬鉻 。
- **襯墊：**鐵氟龍銅網 (PTFE)-柔軟堅韌銅網和氟樹脂塗佈組成。

SELF-LUBRICATING TYPE
Highly wear-resisting PTFE liner. Well made with low clearance. Suitable for precision applications.

MATERIALS
- **BODY:** Medium Carbon Steel S45C, Forged, Zinc Coated (Cr3+)
- **BALL:** Bearing Steel SUJ-2, Heat Treated HRC56°±2, Hard Chrome Plated
- **LINER:** PTFE, Strong & flexible bronze mesh spread with fluorine resin

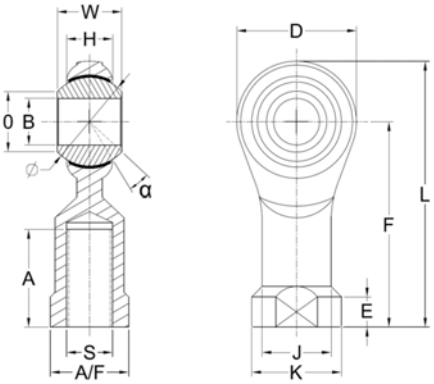

■ 間隙 (mm)
徑向間隙值：小於0.035
軸向間隙值：小於0.05

■ Clearance (Unit: mm)
Radial Clearrance:0.035 or less
Axial Clearance:0.05 or less

公 制 尺 寸 / DIMENSIONS IN METRIC mm

型　號 Model No.	B H7	W +0 -0.1	D	L	O	H +0.1 -0.4	A +2 -0	F	J	K	E	A/F +0 -0.3	Thread S	旋角 α	球徑 Ball Dia. Ø	徑向荷重 Radial S. load (kgf)	重量 Weight (g)
NHS 3 R/L	3	6	14	28.5	7.4	4	10	21.5	6.5	8	3	7	3x0.5	13	9.30	180	8
NHS 4 R/L	4	7	14	31.5	7.6	4.2	12	24.5	8	9.5	4	8	4x0.7	13	10.32	220	11
NHS 5 R/L	5	8	17	36.5	7.7	5.2	12	28	9	11	4	9	5x0.8	13	11.11	390	16
NHS 6 R/L	6	9	19	39	8.9	6	14	29.5	10	13	5	11	6x1.0	13	12.70	500	24
NHS 8 RF/LF **NHS 8 R/L**	8	12	23.5	47.5	10.4	8	17	36	13	16	5	14	8x1.0 8x1.25	13	15.88	740	41
NHS 10 RF/LF **NHS 10 R/L**	10	14	27	58	12.9	10.5	21	44.5	15	19	7	17	10x1.25 10x1.5	13	19.05	940	70
NHS 12 RF/LF **NHS 12 R/L**	12	16	32	65	15.4	11.5	24	49	18	22	7	19	12x1.25 12x1.75	13	22.23	1100	105
NHS 14 RF/LF **NHS 14 R/L**	14	19	36	75	16.8	13.5	27	57	20	25	8	21	14x1.5 14x2.0	15	25.40	1520	150
NHS 16 RF/LF **NHS 16 R/L**	16	21	39	84	19.3	13.8	33	64.5	22	27	8	22	16x1.5 16x2.0	15	28.58	2020	180
NHS 18 R/L	18	23	43	91.5	21.8	15	36	70	25	31	10	27	18x1.5	15	31.75	2520	255
NHS 20 R/L	20	25	47	100	24.3	16.8	40	76.5	28	34	10	30	20x1.5	15	34.93	2780	340
NHS 22 R/L	22	28	50	108	25.9	18.2	43	83	30	37	12	32	22x1.5	15	38.10	3590	420
NHS 25 R/L	25	31	56	120	29.6	21	48	92	34	42	12	36	24x2.0	15	42.85	5430	590
NHS 30 R/L	30	37	68	145	34.8	23.6	58	111	40	50	15	41	30x2.0	15	50.80	6910	950

英 制 尺 寸 / DIMENSIONS IN INCHES *±0.02~0.04 inches

型　號 Model No.	B H7	W +0 -0.004	D	L	O	H +0.004 -0.016	A +0.08 -0	F	J	K	E	A/F +0 -0.012	Thread S	旋角 α	球徑 Ball Dia. Ø	徑向荷重 Radial S. load (Lbs)	重量 Weight (Lbs)
NHS 3/16 R/L	0.1875	0.312	0.669	1.437	0.303	0.205	0.472	1.102	0.354	0.433	0.157	0.354	UNF 3/16-32	13	0.437	860	0.04
NHS 1/4 R/L	0.2500	0.375	0.748	1.535	0.350	0.236	0.551	1.161	0.394	0.512	0.197	0.433	UNF1/4-28	13	0.500	1100	0.05
NHS 5/16 R/L	0.3125	0.437	0.925	1.870	0.409	0.315	0.669	1.417	0.512	0.630	0.197	0.551	UNF 5/16-24	13	0.625	1630	0.09
NHS 3/8 R/L	0.3750	0.500	1.063	2.283	0.508	0.413	0.827	1.752	0.591	0.748	0.276	0.669	UNF 3/8-24	13	0.750	2070	0.15
NHS 7/16 R/L	0.4375	0.500	1.063	2.283	0.508	0.413	0.827	1.752	0.591	0.748	0.276	0.669	UNF 7/16-20	13	0.750	2070	0.15
NHS 1/2 R/L	0.5000	0.625	1.260	2.559	0.606	0.453	0.945	1.929	0.709	0.866	0.276	0.748	UNF 1/2-20	13	0.875	2430	0.23
NHS 5/8 R/L	0.6250	0.750	1.535	3.307	0.760	0.543	1.299	2.539	0.866	1.063	0.315	0.866	UNF 5/8-18	15	1.125	4450	0.40
NHS 3/4 R/L	0.7500	0.875	1.693	3.602	0.858	0.591	1.417	2.756	0.984	1.220	0.394	1.063	UNF 3/4-16	15	1.250	6130	0.56

桿端軸承 / ROD END BEARING
NOS Series

鐵氟龍耐磨型
採用超耐磨襯套材料 (PTFE)，免給油耐磨設計，精密無間隙，必須微調間距之場所最合適。

材　質
- **主體：**中碳鋼S45C，鍛造，表面鍍鋅 (Cr3+)。
- **鋼珠：**鉻鉬軸承鋼SUJ-2， 熱處理 HRC 56°±2，鍍硬鉻 。
- **襯墊：**鐵氟龍銅網 (PTFE)-柔軟堅韌銅網和氟樹脂塗佈組成。

SELF-LUBRICATING TYPE
Highly wear-resisting PTFE liner. Well made with low clearance. Suitable for precision applications.

MATERIALS
- **BODY:** Medium Carbon Steel S45C, Forged, Zinc Coated (Cr3+)
- **BALL:** Bearing Steel SUJ-2, Heat Treated HRC56°±2, Hard Chrome Plated
- **LINER:** PTFE, Strong & flexible bronze mesh spread with fluorine resin

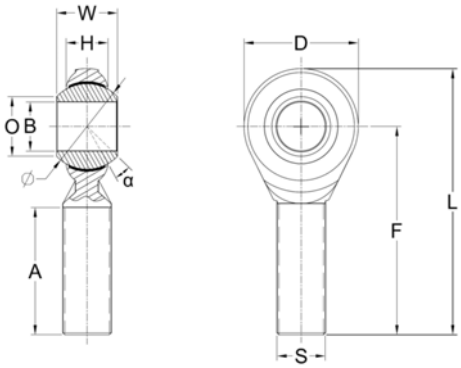

■ 間隙 (mm)
徑向間隙值：小於0.035
軸向間隙值：小於0.05

■ Clearance (Unit: mm)
Radial Clearrance:0.035 or less
Axial Clearance:0.05 or less

公 制 尺 寸 / DIMENSIONS IN METRIC mm

型 號 Model No.	B H7	W +0 -0.1	D	L	O	H +0.1 -0.4	A +2 -0	F	Thread S	旋角 α	球徑 Ball Dia. Ø	徑向荷重 Radial S. load (kgf)	重量 Weight (g)
NOS 3 R/L	3	6	14	32	7.3	4.5	13	25	3x0.5	13	9.30	220	8
NOS 4 R/L	4	7	14	37	7.6	5.3	17	30	4x0.7	13	10.32	220	8
NOS 5 R/L	5	8	17	43.5	7.7	5.5	22	35	5x0.8	13	11.11	340	13
NOS 6 R/L	6	9	19	47.5	8.9	6	24	38	6x1.0	13	12.70	490	17
NOS 8 RF/LF **NOS 8 R/L**	8	12	23.5	55.5	10.4	8	26	44	8x1.0 8x1.25	13	15.88	690	33
NOS 10 RF/LF **NOS 10 R/L**	10	14	27	63.5	12.9	10	30	50	10x1.25 10x1.5	13	19.05	940	54
NOS 12 RF/LF **NOS 12 R/L**	12	16	32	72	15.4	11	35	56	12x1.25 12x1.75	13	22.23	1100	85
NOS 14 RF/LF **NOS 14 R/L**	14	19	36	81	16.8	12.5	37	63	14x1.5 14x2.0	15	25.40	1520	125
NOS 16 RF/LF **NOS 16 R/L**	16	21	39	91.5	19.3	13.5	43	72	16x1.5 16x2.0	15	28.58	2020	170
NOS 18 R/L	18	23	44	97	21.8	15	46	75	18x1.5	15	31.75	2520	230
NOS 20 R/L	20	25	47	104	24.3	17	48	80.5	20x1.5	15	34.93	2780	305
NOS 22 R/L	22	28	50	109	25.9	18	51	84	22x1.5	15	38.10	3590	385
NOS 25 R/L	25	31	56	122	29.6	20	57	94	24x2.0	15	42.85	5430	515
NOS 30 R/L	30	37	68	146.5	34.8	23.5	66	112.5	30x2.0	15	50.80	6910	885

英 制 尺 寸 / DIMENSIONS IN INCHES

型 號 Model No.	B H7	W +0 -0.004	D	L	O	H +0.004 -0.016	A +0.08 -0	F	Thread S	旋角 α	球徑 Ball Dia. Ø	徑向荷重 Radial S. load (Lbs)	重量 Weight (Lbs)
NOS 3/16 R/L	0.1875	0.312	0.669	1.713	0.303	0.217	0.866	1.378	UNF 3/16-32	13	0.4374	750	0.03
NOS 1/4 R/L	0.2500	0.375	0.748	1.870	0.350	0.236	0.945	1.496	UNF 1/4-28	13	0.500	1080	0.04
NOS 5/16 R/L	0.3125	0.437	0.925	2.185	0.409	0.315	1.024	1.732	UNF 5/16-24	13	0.625	1520	0.07
NOS 3/8 R/L	0.3750	0.500	1.063	2.500	0.508	0.394	1.181	1.969	UNF 3/8-24	13	0.750	2070	0.12
NOS 7/16 R/L	0.4375	0.500	1.063	2.500	0.508	0.394	1.181	1.969	UNF 7/16-20	13	0.750	2070	0.12
NOS 1/2 R/L	0.5000	0.625	1.260	2.835	0.606	0.433	1.378	2.205	UNF 1/2-20	13	0.875	2430	0.19
NOS 5/8 R/L	0.6250	0.750	1.535	3.602	0.760	0.512	1.693	2.835	UNF 5/8-18	15	1.125	4450	0.38
NOS 3/4 R/L	0.7500	0.875	1.693	3.819	0.858	0.590	1.811	2.953	UNF 3/4-16	15	1.250	6130	0.51

桿端軸承 / ROD END BEARING
MHS Series

射出密合型
特殊超耐磨複合材料襯套，自潤圓滑，免給油，長時間運轉不易磨損，使用壽命更長。

材　質
- **主體**：中碳鋼S45C，鍛造，表面鍍鋅(Cr3+)。
- **鋼珠**：鉻鉬軸承鋼SUJ-2，熱處理 HRC56°±2，鍍硬鉻。
- **襯墊**：特殊耐磨複合材料或POM工程塑鋼。

SELF-LUBRICATING TYPE
The special liner material highers lubricating performance, decreases abrasion and extends a bearing lifespan

MATERIALS
- **BODY:** Medium Carbon Steel S45C, Forged, Zinc Coated (Cr3+)
- **BALL:** Bearing Steel SUJ-2, Heat Treated HRC56°±2, Hard Chrome Plated
- **LINER:** Special Reinforce Nylon or P.O.M. Materials

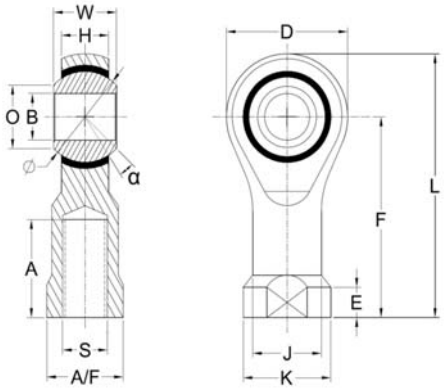

■ 間隙 (mm)
徑向間隙值：小於0.035
軸向間隙值：小於0.05

■ Clearance (Unit: mm)
Radial Clearrance:0.035 or less
Axial Clearance:0.05 or less

公 制 尺 寸 / DIMENSIONS IN METRIC mm

型　號 Model No.	B H7	W +0 -0.1	D	L	O	H +0 -0.1	A +2 -0	F	J	K	E	A/F +0 -0.3	Thread S	旋角 α	球徑 Ball Dia. Ø	徑向荷重 Radial S. load (kgf)	重量 Weight (g)
MHS 5 R/L	5	8	17	36.5	7.7	6	12	28	9	11	4	9	5x0.8	13	11.11	560	18
MHS 6 R/L	6	9	19	39	8.9	6.7	14	29.5	10	13	5	11	6x1.0	13	12.70	690	27
MHS 8 RF/LF **MHS 8 R/L**	8	12	23.5	47.5	10.4	9	17	36	13	16	5	14	8x1.0 8x1.25	13	15.88	980	48
MHS 10 RF/LF **MHS 10 R/L**	10	14	27	58	12.9	10.5	21	44.5	15	19	7	17	10x1.25 10x1.5	13	19.05	1320	75
MHS 12 RF/LF **MHS 12 R/L**	12	16	32	65	15.4	12	24	49	18	22	7	19	12x1.25 12x1.75	13	22.23	1670	120
MHS 14 RF/LF **MHS 14 R/L**	14	19	36	75	16.8	14	27	57	20	25	8	21	14x1.5 14x2.0	15	25.40	2060	170
MHS 16 RF/LF **MHS 16 R/L**	16	21	39	84	19.3	15	33	64.5	22	27	8	22	16x1.5 16x2.0	15	28.58	2500	200

英 制 尺 寸 / DIMENSIONS IN INCHES

型　號 Model No.	B H7	W +0 -0.004	D	L	O	H +0 -0.004	A +0.08 -0	F	J	K	E	A/F +0 -0.012	Thread S	旋角 α	球徑 Ball Dia. Ø	徑向荷重 Radial S. load (Lbs)	重量 Weight (Lbs)
MHS 1/4 R/L	0.2500	0.375	0.748	1.535	0.350	0.264	0.551	1.161	0.394	0.512	0.197	0.433	UNF 1/4-28	13	0.500	1520	0.06
MHS 5/16 R/L	0.3125	0.437	0.925	1.870	0.409	0.354	0.669	1.417	0.512	0.630	0.197	0.551	UNF 5/16-24	13	0.625	2160	0.11
MHS 3/8 R/L	0.3750	0.500	1.063	2.283	0.508	0.413	0.827	1.752	0.591	0.748	0.276	0.669	UNF 3/8-24	13	0.750	2910	0.18
MHS 7/16 R/L	0.4375	0.500	1.063	2.283	0.508	0.413	0.827	1.752	0.591	0.748	0.276	0.669	UNF 7/16-20	13	0.750	2910	0.18
MHS 1/2 R/L	0.5000	0.625	1.260	2.559	0.606	0.472	0.945	1.929	0.709	0.866	0.276	0.748	UNF 1/2-20	13	0.875	3680	0.27
MHS 5/8 R/L	0.6250	0.750	1.535	3.307	0.760	0.591	1.299	2.539	0.866	1.063	0.315	0.866	UNF 5/8-18	15	1.125	5510	0.47

桿端軸承 / ROD END BEARING
MOS Series

射出密合型
特殊超耐磨複合材料襯套，自潤圓滑，免給油，
長時間運轉不易磨損，使用壽命更長。

材　質
- **主體：**中碳鋼S45C，鍛造，表面鍍鋅 (Cr3+)。
- **鋼珠：**鉻鉬軸承鋼SUJ-2， 熱處理 HRC 56°±2，鍍硬鉻 。
- **襯墊：**特殊耐磨尼龍複合材料或POM工程塑鋼。

SELF-LUBRICATING TYPE
The special liner material highers lubricating performance, decreases abrasion and extends a bearing lifespan

MATERIALS
- **BODY:** Medium Carbon Steel S45C, Forged, Zinc Coated (Cr3+)
- **BALL:** Bearing Steel SUJ-2, Heat Treated HRC56°±2, Hard Chrome Plated
- **LINER:** Special Reinforce Nylon or P.O.M. Materials

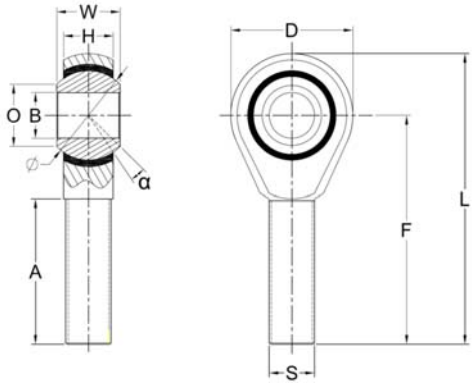

■ 間隙 (mm)
徑向間隙值：小於0.035
軸向間隙值：小於0.05

■ Clearance (Unit: mm)
Radial Clearrance:0.035 or less
Axial Clearance:0.05 or less

公 制 尺 寸 / DIMENSIONS IN METRIC mm

型　號 Model No.	B H7	W +0 -0.1	D	L	O	H +0 -0.1	A +2 -0	F	Thread S	旋角 α	球徑 Ball Dia. Ø	徑向荷重 Radial S. load (kgf)	重量 Weight (g)
MOS 5 R/L	5	8	17	43.5	7.7	6	22	35	5x0.8	13	11.11	340	14
MOS 6 R/L	6	9	19	47.5	8.9	6.7	24	38	6x1.0	13	12.70	480	21
MOS 8 RF/LF **MOS 8 R/L**	8	12	23.5	56.5	10.4	9	26	45	8x1.0 8x1.25	13	15.88	680	40
MOS 10 RF/LF **MOS 10 R/L**	10	14	27	63.5	12.9	10.5	30	50	10x1.25 10x1.5	13	19.05	1070	65
MOS 12 RF/LF **MOS 12 R/L**	12	16	32	72	15.4	12	35	56	12x1.25 12x1.75	13	22.23	1650	95
MOS 14 RF/LF **MOS 14 R/L**	14	19	36	81	16.8	14	37	63	14x1.5 14x2.0	15	25.40	2040	146
MOS 16 RF/LF **MOS 16 R/L**	16	21	39	91.5	19.3	15	43	72	16x1.5 16x2.0	15	28.58	2470	185

英 制 尺 寸 / DIMENSIONS IN INCHES

型　號 Model No.	B H7	W +0 -0.004	D	L	O	H +0 -0.004	A +0.08 -0	F	Thread S	旋角 α	球徑 Ball Dia. Ø	徑向荷重 Radial S. load (Lbs)	重量 Weight (Lbs)
MOS 1/4 R/L	0.2500	0.375	0.748	1.870	0.350	0.264	0.945	1.496	UNF 1/4-28	13	0.500	1060	0.05
MOS 5/16 R/L	0.3125	0.437	0.925	2.224	0.409	0.354	1.024	1.772	UNF 5/16-24	13	0.625	1500	0.09
MOS 3/8 R/L	0.3750	0.500	1.063	2.500	0.508	0.413	1.181	1.969	UNF 3/8-24	13	0.750	2360	0.14
MOS 7/16 R/L	0.4375	0.500	1.063	2.500	0.508	0.413	1.181	1.969	UNF 7/16-20	13	0.750	2360	0.14
MOS 1/2 R/L	0.5000	0.625	1.260	2.835	0.606	0.472	1.378	2.205	UNF 1/2-20	13	0.875	3640	0.22
MOS 5/8 R/L	0.6250	0.750	1.535	3.602	0.760	0.591	1.693	2.835	UNF 5/8-18	15	1.125	5450	0.41

桿端軸承 / ROD END BEARING
SI-E Series

工程塑膠射出型
襯墊以杜邦100ST工程塑膠 (P.O.M.)射出填充，
堅實耐高拉力，扁平小寬幅，不佔空間。
材　質
- **主體：**中碳鋼S45C，鍛造，表面鍍鋅 (Cr3+)。
- **鋼珠：**鉻鉬軸承鋼SUJ-2， 熱處理 HRC 56˚±2，鍍硬鉻 。
- **襯墊：**杜邦100ST POM工程塑膠。

SELF-LUBRICATING TYPE
High strength engineering plastic injected liner. Flat design.
MATERIALS
- **BODY:** Medium Carbon Steel S45C, Forged, Zinc Coated (Cr3+)
- **BALL:** Bearing Steel SUJ-2, Heat Treated HRC 56˚±2, Hard Chrome Plated
- **LINER:** Friction resistant P.O.M. (Dupont 100ST)

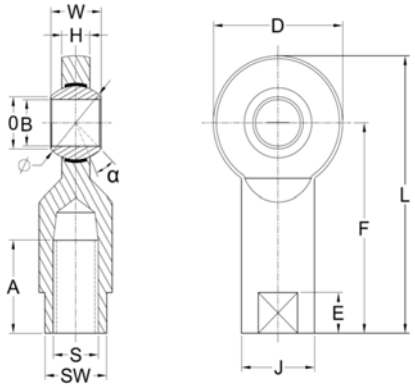

■ 間隙 (mm)
徑向間隙值：小於0.035
軸向間隙值：小於0.05

■ Clearance (Unit: mm)
Radial Clearrance:0.035 or less
Axial Clearance:0.05 or less

公 制 尺 寸 / DIMENSIONS IN METRIC mm

型　號 Model No.	B *(1)	W +0 -0.1	D	L	O	H +0 -0.1	A +2 -0	F	J	E	SW +0 -0.3	Thread S	旋角 α	球徑 Ball Dia. Ø	徑向荷重 Radial S. load (kgf)	重量 Weight (g)
SI 6E ,SIL 6E	6	6	20	40	9	4	12	30	10	6	9	6x1.0	13	11.11	750	17
SI 8EF ,SIL 8EF **SI 8E ,SIL 8E**	8	8	23	47.5	10	5	16	36	13	7	11	8x1.0 8x1.25	15	12.70	1180	36
SI 10EF ,SIL 10EF **SI 10E ,SIL 10E**	10	9	28	57	12	6	20	43	16	8	14	10x1.25 10x1.5	12	15.88	1610	60
SI 12EF ,SIL 12EF **SI 12E ,SIL 12E**	12	10	32	66	15	7	22	50	19	8	17	12x1.25 12x1.75	10	18.00	2250	92
SI 15ESF ,SIL 15ESF **SI 15ES ,SIL 15ES**	15	12	38	80	19	9	25	61	22	8	19	14x1.5 14x2.0	8	22.23	3300	160
SI 17ESF ,SIL 17ESF **SI 17ES ,SIL 17ES**	17	14	44	90	21	10	28	68	25	8	22	16x1.5 16x2.0	10	25.40	4130	215
SI 20ES ,SIL 20ES	20	16	51	102.5	25	12	33	77	28	10	24	20x1.5	8	28.58	5500	280
SI 25ES ,SIL 25ES	25	20	62	125	31	16	42	94	35	12	30	24x2.0	7	36.50	7610	575

***(1) 尺寸公差請詳附錄公差表，Please refer the tolerence table of index.**

桿端軸承 / ROD END BEARING
SA-E Series

工程塑膠射出型
襯墊以杜邦100ST工程塑膠 (P.O.M.)射出填充，堅實耐高拉力，扁平小寬幅，不佔空間。

材　質
- **主體：**中碳鋼S45C，鍛造，表面鍍鋅 (Cr3+)。
- **鋼珠：**鉻鉬軸承鋼SUJ-2， 熱處理 HRC 56°±2，鍍硬鉻 。
- **襯墊：**杜邦100ST POM工程塑膠。

SELF-LUBRICATING TYPE
High strength engineering plastic injected liner. Flat design.

MATERIALS
- **BODY:** Medium Carbon Steel S45C, Forged, Zinc Coated (Cr3+)
- **BALL:** Bearing Steel SUJ-2, Heat Treated HRC 56°±2, Hard Chrome Plated
- **LINER:** Friction resistant P.O.M. (Dupont 100ST)

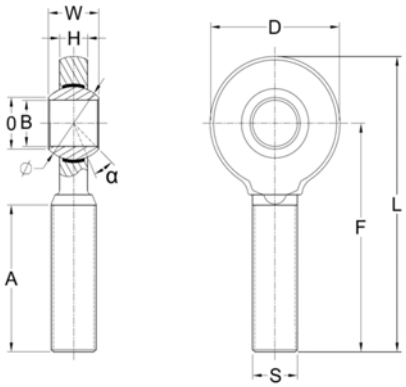

■ 間隙 (mm)
徑向間隙值：小於0.035
軸向間隙值：小於0.05

■ Clearance (Unit: mm)
Radial Clearrance:0.035 or less
Axial Clearance:0.05 or less

公 制 尺 寸 / DIMENSIONS IN METRIC mm

型　號 Model No.	B *(1)	W +0 -0.1	D	L	O	H +0 -0.1	A +2 -0	F	Thread S	旋角 α	球徑 Ball Dia. Ø	徑向荷重 Radial S. load (kgf)	重量 Weight (g)
SA 6E ,SAL 6E	6	6	20	46	9	4	22	36	6x1.0	13	11.11	750	14
SA 8EF ,SAL 8EF **SA 8E ,SAL 8E**	8	8	23	53.5	10	5	25	42	8x1.0 8x1.25	15	12.70	1180	24
SA 10EF ,SAL 10EF **SA 10E ,SAL 10E**	10	9	28	62	12	6	29	48	10x1.25 10x1.5	12	15.88	1610	41
SA 12EF ,SAL 12EF **SA 12E ,SAL 12E**	12	10	32	70	15	7	33	54	12x1.25 12x1.75	10	18.00	2250	67
SA 15ESF ,SAL 15ESF **SA 15ES ,SAL 15ES**	15	12	38	83	19	9	36	64	14x1.5 14x2.0	8	22.23	3300	112
SA 17ESF ,SAL 17ESF **SA 17ES ,SAL 17ES**	17	14	44	91.5	21	10	40	69.5	16x1.5 16x2.0	10	25.40	4130	155
SA 20ES ,SAL 20ES	20	16	51	103.5	25	12	47	78	20x1.5	8	28.58	5500	265
SA 25ES ,SAL 25ES	25	20	62	125	31	16	57	94	24x2.0	7	36.50	7610	495

***(1) 尺寸公差請詳附錄公差表，Please refer the tolerence table of index.**

桿端軸承 / ROD END BEARING

RBT Series 接單生產 (MADE BY ORDER)

不銹鋼耐酸鹼型

採用超耐磨襯套材料 (PTFE)，免給油設計，精密無間隙，
不銹鋼材質，適合酸鹼場所使用。

材 質

- **主體：**不銹鋼SUS304或 SUS303。
- **鋼珠：**不銹鋼 SUS 440C， 熱處理 HRC 58°±2 。
- **襯墊：**鐵氟龍銅網 (PTFE)-柔軟堅韌銅網和氟樹脂塗佈組成。

SELF-LUBRICATING TYPE

Stainless steel body and ball. Highly wear-resisting PTFE liner. Well made with low clearance. Corrosion resistance.

MATERIALS

- **BODY:** Stainless Steel SUS 304 or SUS303
- **BALL:** Stainless Steel SUS 440C or SUS630 Heat Treated
- **LINER:** PTFE, Strong & flexible bronze mesh spread with fluorine resin

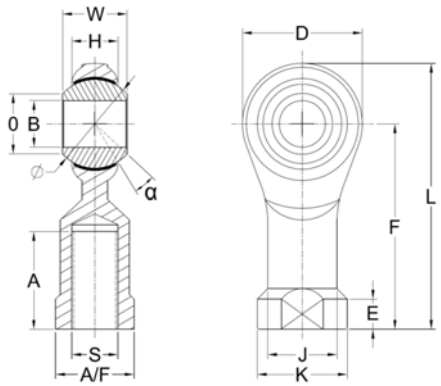

■ 間隙 (mm)
徑向間隙值：小於0.035
軸向間隙值：小於0.05

■ Clearance (Unit: mm)
Radial Clearrance:0.035 or less
Axial Clearance:0.05 or less

公 制 尺 寸 / DIMENSIONS IN METRIC mm

型 號 Model No.	B H7	W +0 -0.1	D	L	O	H +0.1 -0.4	A +2 -0	F	J	K	E	A/F +0 -0.3	Thread S	旋角 α	球徑 Ball Dia. Ø	徑向荷重 Radial S. load (kgf)	重量 Weight (g)
RBT 5 R/L	5	8	17	35.5	7.7	5.5	12	27	9	11	4	9	5x0.8	13	11.11	390	16
RBT 6 R/L	6	9	19	39.5	8.9	6	14	30	10	13	5	11	6x1.0	13	12.70	500	24
RBT 8 RF/LF **RBT 8 R/L**	8	12	23.5	47.5	10.4	8	17	36	13	16	5	14	8x1.0 8x1.25	13	15.88	740	41
RBT 10 RF/LF **RBT 10 R/L**	10	14	27	58.5	12.9	10	21	45	15	19	7	17	10x1.25 10x1.5	13	19.05	940	70
RBT 12 RF/LF **RBT 12 R/L**	12	16	32	66	15.4	11	24	50	18	22	7	19	12x1.25 12x1.75	13	22.23	1100	105
RBT 14 RF/LF **RBT 14 R/L**	14	19	36	75	16.8	12	27	57	20	25	8	21	14x1.5 14x2.0	15	25.40	1520	150
RBT 16 RF/LF **RBT 16 R/L**	16	21	39	83.5	19.3	13	33	64	22	27	8	22	16x1.5 16x2.0	15	28.58	2020	180
RBT 18 R/L	18	23	43	91.5	21.8	15	36	70	25	31	10	27	18x1.5	15	31.75	2520	255
RBT 20 R/L	20	25	47	100.5	24.3	16	40	77	28	34	10	30	20x1.5	15	34.93	2780	340
RBT 22 R/L*	22	28	50	109	25.9	18	43	84	30	37	12	32	22x1.5	15	38.10	3590	420
RBT 25 R/L*	25	31	56	122	29.6	20	48	94	34	42	12	36	24x2.0	15	42.85	5430	590
RBT 30 R/L*	30	37	68	145	34.8	24	58	111	40	50	15	41	30x2.0	15	50.80	6910	950

*** RBT22, RBT25, RBT30 接單生產 (Made By Order)**

英 制 尺 寸 / DIMENSIONS IN INCHES *±0.02~0.04 inches

型 號 Model No.	B H7	W +0 -0.004	D	L	O	H +0.004 -0.016	A +0.08 -0	F	J	K	E	A/F +0 -0.012	Thread S	旋角 α	球徑 Ball Dia. Ø	徑向荷重 Radial S. load (Lbs)	重量 Weight (Lbs)
RBT 3/16 R/L *	0.1875	0.312	0.669	1.398	0.303	0.217	0.472	1.063	0.354	0.433	0.157	0.354	UNF 3/16-32	13	0.437	860	0.04
RBT 1/4 R/L *	0.2500	0.375	0.748	1.555	0.350	0.236	0.551	1.181	0.394	0.512	0.197	0.433	UNF1/4-28	13	0.500	1100	0.05
RBT 5/16 R/L *	0.3125	0.437	0.925	1.870	0.409	0.315	0.669	1.417	0.512	0.630	0.197	0.551	UNF 5/16-24	13	0.625	1630	0.09
RBT 3/8 R/L *	0.3750	0.500	1.063	2.303	0.508	0.394	0.827	1.772	0.591	0.748	0.276	0.669	UNF 3/8-24	13	0.750	2070	0.15
RBT 7/16 R/L *	0.4375	0.500	1.063	2.303	0.508	0.394	0.827	1.772	0.591	0.748	0.276	0.669	UNF 7/16-20	13	0.750	2070	0.15
RBT 1/2 R/L *	0.5000	0.625	1.260	2.598	0.606	0.433	0.945	1.969	0.709	0.866	0.276	0.748	UNF 1/2-20	13	0.875	2430	0.23
RBT 5/8 R/L *	0.6250	0.750	1.535	3.287	0.760	0.512	1.299	2.520	0.866	1.063	0.315	0.866	UNF 5/8-18	15	1.125	4450	0.44
RBT 3/4 R/L *	0.7500	0.875	1.693	3.602	0.858	0.591	1.417	2.756	0.984	1.220	0.394	1.063	UNF 3/4-16	15	1.250	6130	0.63

*** RBT3/16 ~ RBT3/4 為接單生產 (Made By Order)**

桿端軸承 / ROD END BEARING
RBM Series

不銹鋼耐酸鹼型
採用超耐磨襯套材料 (PTFE)，免給油設計，精密無間隙，
不銹鋼材質，適合酸鹼場所使用。

材　質
- **主體：**不銹鋼SUS304或 SUS303。
- **鋼珠：**不銹鋼 SUS 440C， 熱處理 HRC 58°±2 。
- **襯墊：**鐵氟龍銅網 (PTFE)-柔軟堅韌銅網和氟樹脂塗佈組成。

SELF-LUBRICATING TYPE
Stainless steel body and ball. Highly wear-resisting PTFE liner. Well made with low clearance. Corrosion resistance.

MATERIALS
- **BODY:** Stainless Steel SUS 304 or SUS303
- **BALL:** Stainless Steel SUS 440C or SUS630 Heat Treated
- **LINER:** PTFE, Strong & flexible bronze mesh spread with fluorine resin

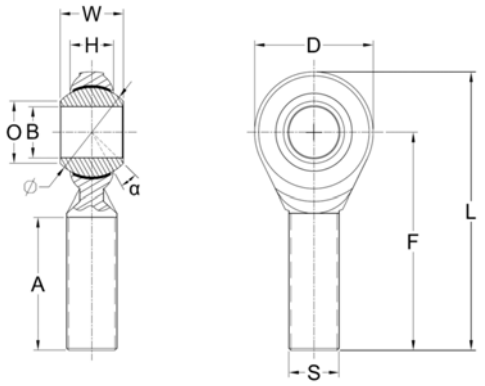

■ 間隙 (mm)
徑向間隙值：小於0.035
軸向間隙值：小於0.05

■ Clearance (Unit: mm)
Radial Clearrance:0.035 or less
Axial Clearance:0.05 or less

公 制 尺 寸 / DIMENSIONS IN METRIC mm

型 號 Model No.	B H7	W +0 -0.1	D	L	O	H +0.1 -0.4	A +2 -0	F	Thread S	旋角 α	球徑 Ball Dia. Ø	徑向荷重 Radial S. load (kgf)	重量 Weight (g)
RBM 5 R/L	5	8	17	43.5	7.7	5.5	22	35	5x0.8	13	11.11	340	13
RBM 6 R/L	6	9	19	47.5	8.9	6	24	38	6x1.0	13	12.70	490	17
RBM 8 RF/LF **RBM 8 R/L**	8	12	23.5	56.5	10.4	8	26	45	8x1.0 8x1.25	13	15.88	690	33
RBM 10 RF/LF **RBM 10 R/L**	10	14	27	63.5	12.9	10	30	50	10x1.25 10x1.5	13	19.05	940	54
RBM 12 RF/LF **RBM 12 R/L**	12	16	32	72	15.4	11	35	56	12x1.25 12x1.75	13	22.23	1100	85
RBM 14 RF/LF **RBM 14 R/L**	14	19	36	81	16.8	12	37	63	14x1.5 14x2.0	15	25.40	1520	125
RBM 16 RF/LF **RBM 16 R/L**	16	21	39	91.5	19.3	13	43	72	16x1.5 16x2.0	15	28.58	2020	170
RBM 18 R/L	18	23	44	97	21.8	15	46	75	18x1.5	15	31.75	2520	230
RBM 20 R/L	20	25	47	102.5	24.3	16	48	79	20x1.5	15	34.93	2780	305
RBM 22 R/L	22	28	50	109	25.9	18	51	84	22x1.5	15	38.10	3590	385
RBM 25 R/L	25	31	56	122	29.6	20	57	94	24x2.0	15	42.85	5430	515
RBM 30 R/L	30	37	68	145	34.8	24	68	111	30x2.0	15	50.80	6910	885

*** RBM22, RBM25, RBM30 接單生產 (Made By Order)**

英 制 尺 寸 / DIMENSIONS IN INCHES

型 號 Model No.	B H7	W +0 -0.004	D	L	O	H +0.004 -0.016	A +0.08 -0	F	Thread S	旋角 α	球徑 Ball Dia. Ø	徑向荷重 Radial S. load (Lbs)	重量 Weight (Lbs)
RBM 3/16 R/L	0.1875	0.312	0.669	1.713	0.303	0.217	0.866	1.378	UNF 3/16-32	13	0.4374	750	0.03
RBM 1/4 R/L	0.2500	0.375	0.748	1.870	0.350	0.236	0.945	1.496	UNF 1/4-28	13	0.500	1080	0.04
RBM 5/16 R/L	0.3125	0.437	0.925	2.224	0.409	0.315	1.024	1.772	UNF 5/16-24	13	0.625	1520	0.07
RBM 3/8 R/L	0.3750	0.500	1.063	2.500	0.508	0.394	1.181	1.969	UNF 3/8-24	13	0.750	2070	0.12
RBM 7/16 R/L	0.4375	0.500	1.063	2.500	0.508	0.394	1.181	1.969	UNF 7/16-20	13	0.750	2070	0.12
RBM 1/2 R/L	0.5000	0.625	1.260	2.835	0.606	0.433	1.378	2.205	UNF 1/2-20	13	0.875	2430	0.19
RBM 5/8 R/L	0.6250	0.750	1.535	3.602	0.760	0.512	1.693	2.835	UNF 5/8-18	15	1.125	4450	0.4
RBM 3/4 R/L	0.7500	0.875	1.693	3.819	0.858	0.590	1.811	2.953	UNF 3/4-16	15	1.250	6130	0.55

*** RBM3/16 ~ RBM3/4 為接單生產 (Made By Order)**

桿端軸承 / ROD END BEARING
HKF, XKF Series

接單生產 (MADE BY ORDER)

重力耐磨型
適用於重負載車輛或機器，超耐磨免給油。
材 質
- **主 體：HKF-** 中碳鋼 S45C，熱處理，鍍鋅 (Cr3+)。
  XKF- 合金鋼SCM440 接受訂製。
- **鋼珠：**鉻鉬軸承鋼SUJ-2，熱處理 HRC 56°±2，鍍硬鉻 。
- **外框：**中碳鋼 S45C或不銹鋼 SUS410。
- **襯墊：**鐵氟龍銅網 (PTFE)-柔軟堅韌銅網和氟樹脂塗佈組成。

SELF-LUBRICATING TYPE
Suitable for heavy load applications.
MATERIALS
- **BODY:HKF-** Carbon Steel S45C , Heat Treated, Zinc Coated (Cr3+)
  XKF- Alloy Steel SCM440 available made by order
- **BALL:** Bearing Steel SUJ-2, Heat Treated HRC56°±2,Hard Chrome Plated
- **RACE:** Medium Carbon Steel S45C or Stainless Steel SUS410
- **LINER:** PTFE, Strong & flexible bronze mesh spread with fluorine resin

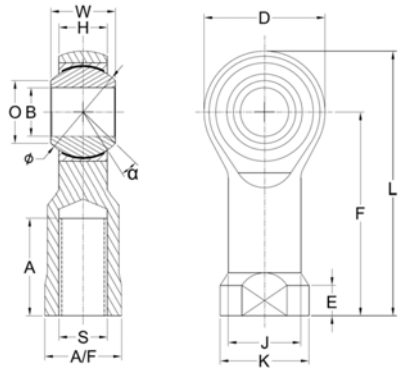

■ 間隙 (mm)
徑向間隙值：小於0.035
軸向間隙值：小於0.05

■ Clearance (Unit: mm)
Radial Clearrance:0.035 or less
Axial Clearance:0.05 or less

公 制 尺 寸 / DIMENSIONS IN METRIC mm

型 號 Model No.	B H7	W +0 -0.1	D	L	O	H +0 -0.1	A +2 -0	F	J	K	E	A/F +0 -0.3	Thread S	旋角 α	球徑 Ball Dia. Ø	徑向荷重 Radial S. load(kgf) HKF	XKF	重量 Weight (g)
HKF 5 R/L	5	8	12	34	7.7	6	9	28	9	11	5	9	5x0.8	13	11.11	750	1400	18
HKF 6 R/L	6	9	14	36.5	8.9	6.7	10	29.5	10	13	5	11	6x1.0	13	12.70	950	1900	25
HKF 8 RF/LF **HKF 8 R/L**	8	12	17	44.5	10.4	9	13	36	13	16	5	14	8x1.0 8x1.25	13	15.88	1360	3220	48
HKF 10 RF/LF **HKF 10 R/L**	10	14	21	55	12.9	10.5	15	44.5	15	19	7	17	10x1.25 10x1.5	13	19.05	1700	4860	77
HKF 12 RF/LF **HKF 12 R/L**	12	16	24	61	15.4	12	18	49	18	22	7	19	12x1.25 12x1.75	13	22.23	1890	5220	123
HKF 14 RF/LF **HKF 14 R/L**	14	19	27	70.5	16.8	14	20	57	20	25	8	21.5	14x1.5 14x2.0	15	25.40	2890	6950	168
HKF 16 RF/LF **HKF 16 R/L**	16	21	33	81	19.3	15	22	64.5	22	27	8	22	16x1.5 16x2.0	15	28.58	3120	7390	214
HKF 18 R/L	18	23	36	88	21.8	17	25	70	25	31	10	27	18x1.5	15	31.75	4380	8310	295
HKF 20 R/L	20	25	40	96.5	24.3	18	28	76.5	28	34	10	30	20x1.5	15	34.93	4930	11640	300
HKF 22 R/L	22	28	43	104.5	25.9	20	30	83	30	37	12	32	22x1.5	15	38.10	5690	11710	495
HKF 25 R/L	25	31	48	116	29.6	22	34	92	34	42	12	36	24x2.0	15	42.85	6570	13850	680
HKF 30 R/L	30	37	56	139	34.8	26	40	111	40	50	15	41	30x2.0	15	50.80	8860	18880	1115

*註：HKF 系列為接單生產。 *NOTE: HKF Series are made by order.

英 制 尺 寸 / DIMENSIONS IN INCHES

型 號 Model No.	B H7	W +0 -0.004	D	L	O	H +0 -0.004	A +0.08 -0	F	J	K	E	A/F +0 -0.012	Thread S	旋角 α	球徑 Ball Dia. Ø	徑向荷重 Radial HKF	XKF	重量 Weight (Lbs)
HKF 3/16 R/L	0.1875	0.312	0.303	1.339	1.437	0.669	0.472	0.236	0.354	0.433	0.157	0.354	UNF3/16-32	13	0.437	1600	3000	0.04
HKF 1/4 R/L	0.2500	0.375	0.350	1.437	1.535	0.748	0.551	0.264	0.394	0.512	0.197	0.433	UNF 1/4-28	13	0.500	2000	4100	0.06
HKF 5/16 R/L	0.3125	0.437	0.409	1.752	1.870	0.925	0.669	0.354	0.512	0.630	0.197	0.551	UNF 5/16-24	13	0.625	2900	7000	0.11
HKF 3/8 R/L	0.3750	0.500	0.508	2.165	2.283	1.063	0.827	0.433	0.590	0.748	0.256	0.669	UNF 3/8-24	13	0.750	3650	10500	0.17
HKF 7/16 R/L	0.4375	0.500	0.508	2.165	2.283	1.063	0.827	0.433	0.590	0.748	0.256	0.669	UNF 7/16-20	13	0.750	3650	10500	0.17
HKF 1/2 R/L	0.5000	0.625	0.606	2.402	2.559	1.259	0.945	0.472	0.709	0.866	0.256	0.748	UNF 1/2-20	13	0.875	4100	11400	0.27
HKF 5/8 R/L	0.6250	0.750	0.760	3.189	3.307	1.535	1.299	0.590	0.866	1.063	0.315	0.866	UNF 5/8-18	15	1.125	6800	16200	0.47
HKF 3/4 R/L	0.7500	0.875	0.858	3.465	3.602	1.692	1.417	0.669	0.984	1.220	0.394	1.063	UNF 3/4-16	15	1.250	9600	18200	0.67

*註：HKF 系列為接單生產。 *NOTE: HKF Series are made by order.

桿端軸承 / ROD END BEARING
HKM, XKM Series

接單生產 (MADE BY ORDER)

重力耐磨型
適用於重負載車輛或機器，超耐磨免給油。
材　質
- **主體：HKM-** 中碳鋼 S45C，熱處理，鍍鋅 (Cr3+)。
  XKM- 合金鋼SCM440 接受訂製。
- **鋼珠：**鉻鉬軸承鋼SUJ-2， 熱處理 HRC 56°±2，鍍硬鉻 。
- **外框：**中碳鋼S45C或不銹鋼 SUS410。
- **襯墊：**鐵氟龍銅網 (PTFE)-柔軟堅韌銅網和氟樹脂塗佈組成。

SELF-LUBRICATING TYPE
Suitable for heavy load applications.
MATERIALS
- **BODY:HKM-** Carbon Steel S45C , Heat Treated, Zinc Coated (Cr3+)
  XKM- Alloy Steel SCM440 is available by customer made order
- **BALL:** Bearing Steel SUJ-2, Heat Treated HRC 56°±2,Hard Chrome Plated
- **RACE:** Medium Carbon Steel S45C or Stainless Steel SUS410
- **LINER:** PTFE, Strong & flexible bronze mesh spread with fluorine resin

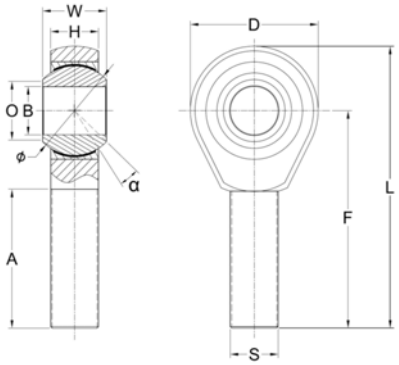

■ 間隙 (mm)
徑向間隙值：小於0.035
軸向間隙值：小於0.05

■ Clearance (Unit: mm)
Radial Clearrance:0.035 or less
Axial Clearance:0.05 or less

公 制 尺 寸 / DIMENSIONS IN METRIC mm

型　號 Model No.	B H7	W +0 -0.1	D	L	O	H +0 -0.1	A +2 -0	F	Thread S	旋角 α	球徑 Ball Dia. Ø	徑向荷重 Radial S.load(kgf) HKM	XKM	重量 Weight (g)
HKM 5 R/L	5	8	17	43.5	7.7	6	22	35	5x0.8	13	11.11	640	1200	14
HKM 6 R/L	6	9	19	47.5	8.9	6.7	24	38	6x1.0	13	12.70	900	1750	21
HKM 8 RF/LF **HKM 8 R/L**	8	12	23.5	55.5	10.4	9	26	44	8x1.0 8x1.25	13	15.88	1320	3210	41
HKM 10 RF/LF **HKM 10 R/L**	10	14	27	63.5	12.9	10.5	30	50	10x1.25 10x1.5	13	19.05	1700	4860	65
HKM 12 RF/LF **HKM 12 R/L**	12	16	32	72	15.4	12	35	56	12x1.25 12x1.75	13	22.23	1890	5400	100
HKM 14 RF/LF **HKM 14 R/L**	14	19	36	81	16.8	14	37	63	14x1.5 14x2.0	15	25.40	2890	6950	146
HKM 16 RF/LF **HKM 16 R/L**	16	21	39	91.5	19.3	15	43	72	16x1.5 16x2.0	15	28.58	3120	7390	195
HKM 18 R/L	18	23	44	97	21.8	17	46	75	18x1.5	15	31.75	4380	8310	270
HKM 20 R/L	20	25	47	104	24.3	18	48	80.5	20x1.5	15	34.93	4930	11640	345
HKM 22 R/L	22	28	50	109	25.9	20	51	84	22x1.5	15	38.10	5690	11710	455
HKM 25 R/L	25	31	56	122	29.6	22	57	94	24x2.0	15	42.85	6570	13850	590
HKM 30 R/L	30	37	68	146.5	34.8	26	66	112.5	30x2.0	15	50.80	8860	18880	1060

*註：HKM 系列為接單生產。 *NOTE: HKM Series are made by order.

英 制 尺 寸 / DIMENSIONS IN INCHES

型　號 Model No.	B H7	W +0 -0.004	D	L	O	H +0 -0.004	A +0.08 -0	F	Thread S	旋角 α	球徑 Ball Dia. Ø	徑向荷重 Radial S.load(Lbs) HKM	XKM	重量 Weight (Lbs)
HKM 3/16 R/L	0.1875	0.312	0.669	1.713	0.303	0.236	0.866	1.378	UNF 3/16-32	13	0.437	1400	2600	0.03
HKM 1/4 R/L	0.2500	0.375	0.748	1.870	0.350	0.264	0.945	1.496	UNF 1/4-28	13	0.500	1900	3800	0.05
HKM 5/16 R/L	0.3125	0.437	0.925	2.185	0.409	0.354	1.024	1.732	UNF 5/16-24	13	0.625	2910	7000	0.09
HKM 3/8 R/L	0.3750	0.500	1.063	2.500	0.508	0.433	1.181	1.969	UNF 3/8-24	13	0.750	3650	10600	0.14
HKM 7/16 R/L	0.4375	0.500	1.063	2.500	0.508	0.433	1.181	1.969	UNF 7/16-20	13	0.750	3650	10600	0.14
HKM 1/2 R/L	0.5000	0.625	1.260	2.835	0.606	0.472	1.378	2.205	UNF 1/2-20	13	0.875	4100	11800	0.22
HKM 5/8 R/L	0.6250	0.750	1.535	3.602	0.760	0.590	1.693	2.835	UNF 5/8-18	15	1.125	6800	16200	0.43
HKM 3/4 R/L	0.7500	0.875	1.732	3.819	0.858	0.669	1.811	2.953	UNF 3/4-16	15	1.250	9600	18300	0.60

*註：HKM 系列為接單生產。 *NOTE: HKM Series are made by order.

桿端軸承 / ROD END BEARING
AXF Series

接單生產 (MADE BY ORDER)

鋁合金自潤型
主體採用高強度航太鋁合金鍛造，質輕、強韌，耐腐蝕。
材 質
- **主體：**航太鋁合金7075-T6，表面陽極處理(紅、藍、銀白)。
- **鋼珠：**鉻鉬軸承鋼SUJ-2， 熱處理 HRC 56°±2，鍍硬鉻 。
- **襯墊：**特殊耐磨尼龍複合材料。

SELF-LUBRICATING TYPE
Light weight, high strengh aircraft alluminum alloy forging body. Corrosion resistance.
MATERIALS
- **BODY:** Aircraft Aluminum 7075-T6, Color Anodized Red, Blue or Silver
- **BALL:** Bearing Steel SUJ-2, Heat Treated HRC 56°±2, Hard Chrome Plated
- **LINER:** Special Reinforce Nylon Material

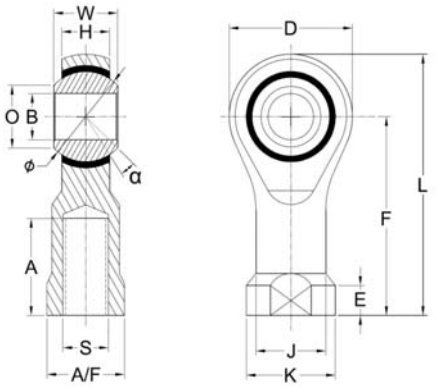

■ 間隙 (mm)
徑向間隙值：小於0.035
軸向間隙值：小於0.05

■ Clearance (Unit: mm)
Radial Clearrance:0.035 or less
Axial Clearance:0.05 or less

公 制 尺 寸 / DIMENSIONS IN METRIC mm

型 號 Model No.	B H7	W +0 -0.1	D	L	O	H +0 -0.1	A +2 -0	F	J	K	E	A/F +0 -0.3	Thread S	旋角 α	球徑 Ball Dia. Ø	徑向荷重 Radial S. load (kgf)	重量 Weight (g)
AXF 6 R/L	6	9	19	39.5	8.9	6.7	14	30	10	13	5	11	6x1.0	13	12.70	1320	18
AXF 8 RF/LF **AXF 8 R/F**	8	12	23.5	47.5	10.4	9	17	36	13	16	5	14	8x1.0 8x1.25	13	15.88	1630	27
AXF 10 RF/LF **AXF 10 R/L**	10	14	27	58.5	12.9	10.5	21	45	15	19	7	17	10x1.25 10x1.5	13	19.05	2040	50
AXF 12 RF/LF **AXF 12 R/L**	12	16	32	66	15.4	12	24	50	18	22	7	19	12x1.25 12x1.75	13	22.23	3180	75

*註：AXF 系列為接單生產。 *NOTE: AXF Series are made by order.

英 制 尺 寸 / DIMENSIONS IN INCHES

型 號 Model No.	B H7	W +0 -0.004	D	L	O	H +0 -0.004	A +0.08 -0	F	J	K	E	A/F +0 -0.012	Thread S	旋角 α	球徑 Ball Dia. Ø	徑向荷重 Radial S. load (Lbs)	重量 Weight (Lbs)
AXF 1/4 R/L	0.2500	0.375	0.748	1.555	0.350	0.264	0.551	1.181	0.394	0.512	0.197	0.433	UNF 1/4-28	13	0.500	2900	0.04
AXF 5/16 R/L	0.3125	0.437	0.925	1.870	0.409	0.354	0.669	1.417	0.512	0.630	0.197	0.551	UNF 5/16-24	13	0.625	3600	0.06
AXF 3/8 R/L	0.3750	0.500	1.063	2.303	0.508	0.433	0.827	1.772	0.590	0.748	0.256	0.669	UNF 3/8-24	13	0.750	4500	0.11
AXF 1/2 R/L	0.5000	0.625	1.260	2.598	0.606	0.472	0.945	1.969	0.709	0.866	0.256	0.748	UNF 1/2-20	13	0.875	7000	0.17

*註：AXF 系列為接單生產。 *NOTE: AXF Series are made by order.

桿端軸承 / ROD END BEARING
AXM Series

接單生產 (MADE BY ORDER)

鋁合金自潤型
主體採用高強度航太鋁合金鍛造，質輕、強韌，耐腐蝕。
材　質
- **主體：**航太鋁合金7075-T6，表面陽極處理(紅、藍、銀白)。
- **鋼珠：**鉻鉬軸承鋼SUJ-2， 熱處理 HRC 56°±2，鍍硬鉻 。
- **襯墊：**特殊耐磨尼龍複合材料。

SELF-LUBRICATING TYPE
Light weight, high strengh aircraft alluminum alloy forging body. Corrosion resistance.
MATERIALS
- **BODY:** Aircraft Aluminum 7075-T6, Color Anodized Red, Blue or Silver
- **BALL:** Bearing Steel SUJ-2, Heat Treated HRC 56°±2, Hard Chrome Plated
- **LINER:** Special Reinforce Nylon Material

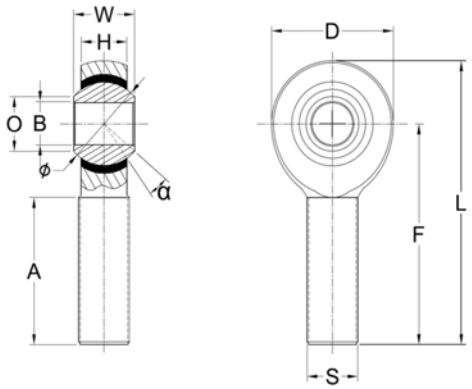

■ 間隙 (mm)
徑向間隙值：小於0.035
軸向間隙值：小於0.05

■ Clearance (Unit: mm)
Radial Clearrance:0.035 or less
Axial Clearance:0.05 or less

公 制 尺 寸 / DIMENSIONS IN METRIC mm

型　號 Model No.	B H7	W +0 -0.1	D	L	O	H +0 -0.1	A +2 -0	F	Thread S	旋角 α	球徑 Ball Dia. Ø	徑向荷重 Radial S. load (kgf)	重量 Weight (g)
AXM 6 R/L	6	9	19	45.5	8.9	6.7	24	36	6x1.0	13	12.70	1140	14
AXM 8 RF/LF **AXM 8 R/L**	8	12	23.5	53.5	10.4	9	26	42	8x1.0 8x1.25	13	15.88	1450	23
AXM 10 RF/LF **AXM 10 R/L**	10	14	26	61	12.9	10.5	30	48	10x1.25 10x1.5	13	19.05	2040	23
AXM 12 RF/LF **AXM 12 R/L**	12	16	30	69	15.4	12	35	54	12x1.25 12x1.75	13	22.23	3500	55
AXM 16 RF/LF **AXM 16 R/L**	16	21	38	91	19.3	15	43	72	16x1.5 16x2.0	15	28.58	3900	82
AXM 18 R/L	18	23	44	97	21.8	17	46	75	18x1.5	15	31.75	4990	110
AXM 20 R/L	20	25	47	101.5	24.3	18	48	78	20x1.5	15	34.93	6080	132

*註：AXM 系列為接單生產。 *NOTE: AXM Series are made by order.

英 制 尺 寸 / DIMENSIONS IN INCHES

型　號 Model No.	B H7	W +0 -0.004	D	L	O	H +0 -0.004	A +0.08 -0	F	Thread S	旋角 α	球徑 Ball Dia. Ø	徑向荷重 Radial S. load (Lbs)	重量 Weight (Lbs)
AXM 1/4 R/L	0.2500	0.375	0.748	1.791	0.350	0.264	0.945	1.417	UNF 1/4-28	13	0.500	2500	0.03
AXM 5/16 R/L	0.3125	0.437	0.925	2.106	0.409	0.354	1.024	1.654	UNF 5/16-24	13	0.625	3200	0.05
AXM 3/8 R/L	0.3750	0.500	1.024	2.402	0.508	0.413	1.181	1.890	UNF 3/8-24	13	0.750	4500	0.05
AXM 1/2 R/L	0.5000	0.625	1.181	2.717	0.606	0.472	1.378	2.126	UNF 1/2-20	13	0.875	7700	0.12
AXM 5/8 R/L	0.6250	0.750	1.496	3.583	0.760	0.590	1.693	2.835	UNF 5/8-18	15	1.125	8600	0.18
AXM 3/4 R/L	0.7500	0.875	1.732	3.819	0.858	0.669	1.811	2.953	UNF 3/4-16	15	1.250	13400	0.29

*註：AXM 系列為接單生產。 *NOTE: AXM Series are made by order.

球面軸承 / SPHERICAL BEARING

PB, PBN, PB_T Series

PB_T,PBN系列接單生產 (PB_T, PBN Series MADE BY ORDER)

材 質

- 外框：**PB, PB_T系列 -** 中碳鋼S45C。
  PBN系列 - 中碳鋼S45C, 表面磷酸錳皮膜處理。
- **鋼珠**：鉻鉬軸承鋼SUJ-2， 熱處理 HRC 56°±2，鍍硬鉻 。
- **襯墊**：**PB 系列 -** 合金銅。
  PB_T 系列 - 鐵氟龍銅網 (PTFE)。
  PBN 系列 - 特殊耐磨尼龍複合材料。

MATERIALS

- **RACE: PB, PB_T Series -** Medium Carbon Steel S45C
  PBN Series - Medium Carbon Steel S45C, Phosphatizing Treated
- **BALL:** Bearing Steel SUJ-2, Heat Treated HRC 56°±2, Hard Chrome Plated
- **LINER: PB Series -** Copper Alloy
  PB_T Series - PTFE
  PBN Series - Special Reinforce Nylon Material

PB Series

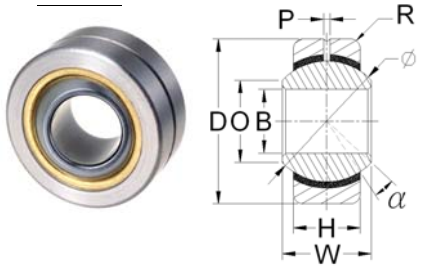

■ 間隙 (Unit: mm)
徑向間隙值：小於0.035
軸向間隙值：小於0.1

■ Clearance (Unit: mm)
Radial Clearrance:0.035 or less
Axial Clearance:0.1 or less

PB_T Series

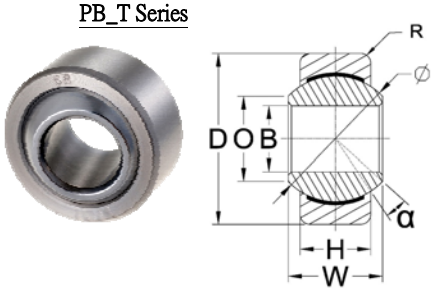

■ 間隙 (mm)
徑向間隙值：小於0.035
軸向間隙值：小於0.05

PBN Series

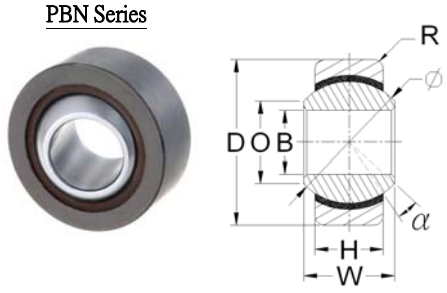

■ Clearance (Unit: mm)
Radial Clearrance:0.035 or less
Axial Clearance:0.05 or less

公 制 尺 寸 / DIMENSIONS IN METRIC mm

型 號 Model No.	B H7	W +0 -0.1	D h7	O	H +0 -0.1	P	R	旋角 α	球徑 Ball Dia. Ø	徑向荷重 Radial S. load (kgf)	重量 Weight (g)
PB 4T	4	7	13.0	7.0	4.5	-	0.5	13.00	10.32	550	5
PB 5 **PB 5T** **PBN 5**	5	8	16.0	7.7	6.0	0.8 - -	0.5	13.00	11.11	790	9
PB 6 **PB 6T** **PBN 6**	6	9	18.0	8.9	6.7	0.8 - -	1.0	13	12.70	990	14
PB 8 **PB 8T** **PBN 8**	8	12	22.0	10.4	9.0	1 - -	1.0	13	15.88	1630	24
PB 10 **PB 10T** **PBN 10**	10	14	26.0	12.9	10.5	1 - -	1.5	13	19.05	2340	39
PB 12 **PB 12T** **PBN 12**	12	16	30.0	15.4	12.0	1 - -	1.5	13	22.23	3160	58
PB 14 **PB 14T**	14	19	34.0	16.8	14.0	1.2 -	2.0	15	25.40	4080	86
PB 16 **PB 16T** **PBN 16**	16	21	38.0	19.3	15.0	1.2 - -	2.0	15	28.58	5090	115
PB 18 **PB 18T**	18	23	42.0	21.8	17.0	1.5 -	2.0	15	31.75	6220	160
PB 20 **PB 20T** **PBN 20**	20	25	46.0	24.3	18.0	1.5 - -	3.0	15	34.93	7440	200
PB 22 **PB 22T**	22	28	50.0	25.8	20.0	1.5 -	3.0	15	38.10	8970	260
PB 25 **PB 25T**	25	31	56.0	29.6	22.0	1.5 -	3.0	15	42.85	11210	360

***註：PB_T及PBN 系列為接單生產。**
***NOTE: PB_T & PBN Series are made by order.**

球面軸承 / SPHERICAL BEARING

PC Series

接單生產 (MADE BY ORDER)

強力耐磨軸承， 免給油、自潤型

材 質

- 外框：合金黃銅 或中碳鋼S45C或不銹鋼SUS410。
- 鋼珠：鉻鉬軸承鋼SUJ-2， 熱處理 HRC 56°±2，鍍硬鉻。
- 襯墊(選購)：鐵氟龍銅網 (PTFE)。

SELF-LUBRICATING TYPE

MATERIALS

- **RACE:** Copper Alloy or Carbon Steel S45C or Stainless Steel SUS410
- **BALL:** Bearing Steel SUJ-2, Heat Treated HRC 56°±2, Hard Chrome Plated
- **LINER (Option):** PTFE, Strong & flexible bronze mesh spread with fluorine resin

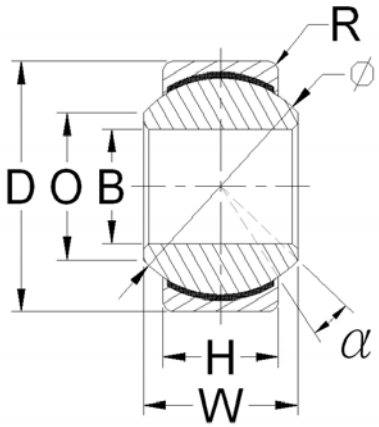

■ 間隙 (mm)
徑向間隙值：小於0.035
軸向間隙值：小於0.05

■ Clearance (Unit: mm)
Radial Clearrance:0.035 or less
Axial Clearance:0.05 or less

公 制 尺 寸 / DIMENSIONS IN METRIC mm

型 號 Model No.	B H7	W +0 -0.1	D h7	O	H +0 -0.1	R	旋角 α	球徑 Ball Dia. Ø	徑向荷重 Radial S. load (kgf)	重量 Weight (g)
PC 4	4	7	12.0	7.0	4.5	0.5	13	10.32	350	4
PC 5	5	8	13.0	7.7	6.0	0.5	13	11.11	550	6
PC 6	6	9	15.0	8.9	6.7	0.5	13	12.70	650	9
PC 8	8	12	18.0	10.4	9.0	1.0	13	15.88	1150	17
PC 10	10	14	22.0	12.9	10.5	1.0	13	19.05	1650	27
PC 12	12	16	26.0	15.4	12.0	1.0	13	22.23	5500	41
PC 14	14	19	30.0	16.8	14.0	1.5	15	25.40	7020	62
PC 16	16	21	34.0	19.3	15.0	1.5	15	28.58	8850	90
PC 18	18	23	38.0	21.8	17.0	1.5	15	31.75	10830	112
PC 20	20	25	42.0	24.3	18.0	2.0	15	34.93	12840	165
PC 22	22	28	46.0	25.8	20.0	2.0	15	38.10	15600	215
PC 25	25	31	50.0	29.6	22.0	2.0	15	42.85	19450	275

***註：PC 系列為接單生產。**

***NOTE: PC Series are made by order.**

球面軸承 / SPHERICAL BEARING

GE Series

接單生產 (MADE BY ORDER)

簡易型
鋼珠與外框間無襯墊設計，一般狀況均適用。
材　質
・**外框及鋼珠：**鉻鉬軸承鋼SUJ-2， 熱處理 HRC 56°±2，
表面磷酸錳皮膜處理。

ECONOMIC TYPE
Matel to matel. Economic type for general purpose
MATERIALS
・**RACE & BALL:** Bearing Steel SUJ-2, Heat Treated HRC 56°±2,
Phosphatizing Treated

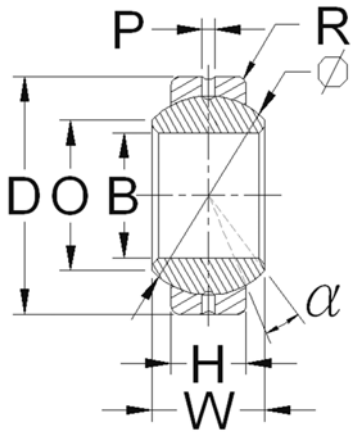

公 制 尺 寸 / DIMENSIONS IN METRIC mm

型　號 Model No.	B *(1)	W +0 -0.1	D *(1)	O	H +0 -0.1	P	R	旋角 α	球徑 Ball Dia. Ø	徑向荷重 Radial S. load (kgf)	重量 Weight (g)
GE 8	8	8	16.0	10.0	5.0	1.0	1.0	15	12.70	2800	8
GE 10	10	9	19.0	12.0	6.0	1.0	1.5	12	15.88	4100	13
GE 12	12	10	22.0	14.0	7.0	1.0	1.5	10	18.00	5500	16
GE 15	15	12	26.0	18.0	9.0	1.5	2.0	8	22.23	8600	28
GE 17	17	14	30.0	20.0	10.0	1.5	2.0	10	25.40	10800	52
GE 20	20	16	35.0	24.0	12.0	1.5	2.0	8	28.58	14800	70
GE 25	25	20	42.0	29.0	16.0	2.0	3.0	7	36.50	24400	130
GE 30	30	22	47.0	34.0	18.0	2.0	3.0	6	42.85	31600	170
GE 35	35	25	55.0	39.0	20.0	2.0	3.0	6	48.00	40700	250
GE 40	40	28	62.0	45.0	22.0	2.5	4.0	7	54.00	50900	320
GE 45	45	32	68.0	50.0	25.0	2.5	4.0	7	60.00	65200	450
GE 50	50	35	75.0	55.0	28.0	2.5	5.0	6	66.00	79500	555
GE 60	60	44	90.0	66.0	36.0	2.5	5.0	6	80.00	124300	1100

***(1) 尺寸公差請詳附錄公差表，Please refer the tolerance table of index.**

***註：GE 系列為接單生產。 *NOTE: GE Series are made by order.**

球面軸承 / SPHERICAL BEARING
GE-C Series

接單生產 (MADE BY ORDER)

免給油、自潤型
材　質
- **外框:** 中碳鋼S45C。
- **鋼珠:** 鉻鉬軸承鋼SUJ-2， 熱處理 HRC 56°±2，表面鍍硬鉻 。
- **襯墊:** 鐵氟龍銅網 (PTFE)-柔軟堅韌銅網和氟樹脂塗佈組成。

SELF-LUBRICATING TYPE
MATERIALS
- **RACE:** Medium Carbon Steel S45C
- **BALL:** Bearing Steel SUJ-2, Heat Treated HRC 56°±2, Hard Chrome Plated
- **LINER:**PTFE, Strong & flexible bronze mesh spread with fluorine resin

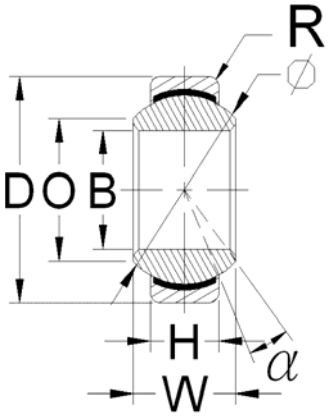

■ 間隙 (mm)
徑向間隙值：小於0.035
軸向間隙值：小於0.05

■ Clearance (Unit: mm)
Radial Clearrance:0.035 or less
Axial Clearance:0.05 or less

公 制 尺 寸 / DIMENSIONS IN METRIC mm

型　號 Model No.	B *(1)	W +0 -0.1	D *(1)	O	H +0 -0.1	R	旋角 α	球徑 Ball Dia. Ø	徑向荷重 Radial S. load (kgf)	重量 Weight (g)
GE 8 C	8	8	16.0	10.0	5.0	1.0	15	12.70	1480	8
GE 10 C	10	9	19.0	12.0	6.0	1.5	12	15.88	2100	13
GE 12 C	12	10	22.0	14.0	7.0	1.5	10	18.00	2900	16
GE 15 C	15	12	26.0	18.0	9.0	2.0	8	22.23	4480	28
GE 17 C	17	14	30.0	20.0	10.0	2.0	10	25.40	5700	52
GE 20 C	20	16	35.0	24.0	12.0	2.0	8	28.58	7950	70
GE 25 C	25	20	42.0	29.0	16.0	3.0	7	36.50	12940	130
GE 30 C	30	22	47.0	34.0	18.0	3.0	6	42.85	16920	170
GE 35 C	35	25	55.0	39.0	20.0	3.0	6	48.00	22830	250
GE 40 C	40	28	62.0	45.0	22.0	4.0	7	54.00	28540	320
GE 45 C	45	32	68.0	50.0	25.0	4.0	7	60.00	36970	450
GE 50 C	50	35	75.0	55.0	28.0	5.0	6	66.00	44850	555
GE 60 C	60	44	90.0	66.0	36.0	5.0	6	80.00	70840	1100

***(1) 尺寸公差請詳附錄公差表，Please refer the tolerance table of index.**

***註：GE_C 系列為接單生產。 *NOTE: GE_C Series are made by order.**

連球軸承 / LINK BALL BEARING
RBL Series

材　質
- 主　體：高強度鋅合金
- 活動柄：碳鋼，表面鍍鋅 (Cr3+)
- 防塵套：特殊合成橡膠，NBR

MATERIALS
- **BODY:** High Strength Zinc Alloy
- **BALL STUD:** Carbon Steel , Zinc Coated (Cr3+)
- **BOOT:** Special Synthetic Rubber, NBR

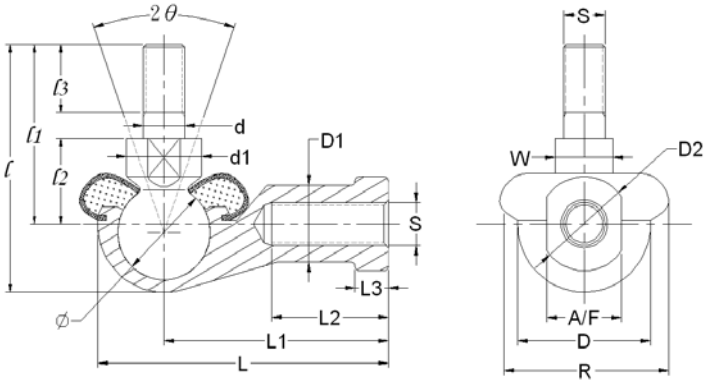

■ 間隙 (mm)
徑向間隙值：0.02~0.06
軸向間隙值：小於0.3

■ Clearance (Unit: mm)
Radial Clearrance:0.02~0.06
Axial Clearance:0.3 or less

公 制 尺 寸 / DIMENSIONS IN METRIC mm

型　號	外 型 尺 寸 Outline Dimensions				螺紋 Thread	主 體 尺 寸 Body Dimensions						活 動 柄 尺 寸 Ball Stud Dimensions							旋角	荷重 S. load	重量 Weight
Model No.	L	D	ℓ	R	S	L1	L2	L3	D1	D2	A/F +0 -0.3	ℓ1	ℓ2 ±0.3	ℓ3	d -0.05	d1	W +0 -0.3	Ball Dia. Ø	2θ	(kgf)	(g)
RBL 5 R/L	35	16	29	19	5x0.8	27	12	4	9	11	9	21	10	8	5	9	7	11.11	45	250	24
RBL 6 R/L	40	19	35.5	21	6x1.0	30	14	5	10	13	10	26	11	11	6	10	8	12.70	45	350	37
RBL 8 R/L	48	22	42.5	25	8x1.25	36	17	5	12.5	16	14	31	14	14	8	12	10	15.88	45	660	67
RBL 10 RF/LF	57	28	50	28	10x1.25	43	21	6.5	15	19	17	37	17	17	10	14	12	19.05	45	1030	105
RBL 10 R/L	57	28	53.5	28	10x1.5	43	21	6.5	15	19	17	43	17	21	10	14	12	19.05	45	1030	110
RBL 12 RF/LF	66	31	57.5	33	12x1.25	50	25	6.5	17.5	22	19	42	19.6	19	12	19	17	22.23	45	1580	165
RBL 12 R/L	66	31	64.5	33	12x1.75	50	25	6.5	17.5	22	19	49	19.6	26	12	19	17	22.23	45	1580	175
RBL 14 RF/LF	75	35	74.5	38	14x1.5	57	26	8	20	25	22	56	21.5	25	14	19	17	25.40	45	1910	265
RBL 14 R/L	75	35	80	38	14x2.0	57	26	8	20	25	22	62	21.5	31	14	19	17	25.40	45	1910	270
RBL 16 RF/LF	84	39	79	43	16x1.5	64	32	8	22	27	22	60	23.5	25	16	22	19	25.40	35	2600	325
RBL 16 R/L	84	39	85.5	43	16x2.0	64	32	8	22	27	22	66	23.5	31	16	22	19	25.40	35	2600	335

連球軸承 / LINK BALL BEARING
BI Series

材　質
- 主　體：高強度鋅合金
- 活動柄：碳鋼 , 表面鍍鋅 (Cr3+)
- 防塵套：特殊合成橡膠，NBR

MATERIALS
- **BODY:** High Strength Zinc Alloy
- **BALL STUD:** Carbon Steel , Zinc Coated (Cr3+)
- **BOOT:** Special Synthetic Rubber, NBR

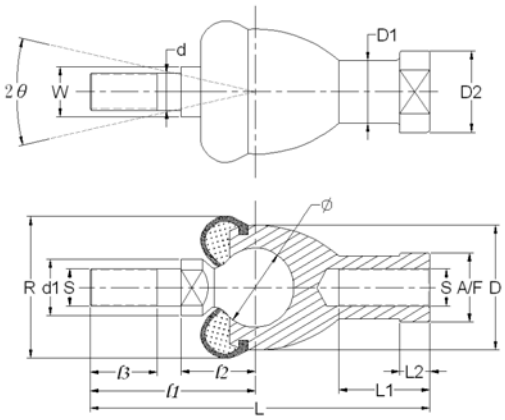

■ 間隙 (mm)
徑向間隙值：0.02~0.06
軸向間隙值：小於0.3

■ Clearance (Unit: mm)
Radial Clearrance:0.02~0.06
Axial Clearance:0.3 or less

公 制 尺 寸 / DIMENSIONS IN METRIC mm

型　號	外 型 尺 寸 Outline Dimensions			螺紋 Thread	主 體 尺 寸 Body Dimensions					活 動 柄 尺 寸 Ball Stud Dimensions							旋角	荷重 S. load	重量 Weight
Model No.	L	D	R	S	L1	L2	D1	D2	A/F +0 -0.3	ℓ1	ℓ2 ±0.3	ℓ3	d -0.05	d1	W +0 -0.3	Ball Dia. Ø	2θ	(kgf)	(g)
BI 5 R/L *	46	17	19	5x0.8	12	4	9	11	9	22	11	8	5	9	7	11.11	45	250	25
BI 6 R/L	55.5	20	21	6x1.0	15	5	10	13	11	27.5	12.5	11	6	10	8	12.70	45	360	45
BI 8 R/L	67	24	26	8x1.25	16	6	12.5	16	14	33	16	14	8	12	10	15.88	45	570	80
BI 10 RF/LF	72.5	28	28	10x1.25	18	6.5	15	19	17	39.5	19.5	17	10	14	12	19.05	40	810	110
BI 10 R/L	76.5	28	28	10x1.5	18	6.5	15	19	17	45.5	19.5	21	10	14	12	19.05	40	810	115
BI 12 RF/LF	87	32	34	12x1.25	20	7	17.5	22	19	43.6	19.6	19	12	19	17	22.23	40	1100	190
BI 12 R/L	94	32	34	12x1.75	20	7	17.5	22	19	50.6	19.6	26	12	19	17	22.23	40	1100	195
BI 14 RF/LF *	103	36	38	14x1.5	25	8	20	25	22	58	23.5	22	14	19	17	25.40	40	1440	275
BI 14 R/L *	109	36	38	14x2.0	25	8	20	25	22	64	23.5	28	14	19	17	25.40	40	1440	280
BI 16 RF/LF *	112	40	44	16x1.5	27	8	22	27	22	62	25.5	23	16	22	19	25.40	35	1440	360
BI 16 R/L *	118	40	44	16x2.0	27	8	22	27	22	68	25.5	29	16	22	19	25.40	35	1440	370

*註：BI 5, BI 14, 16 系列為接單生產。 *NOTE: BI5, BI 14, 16 Series are made by order.

連球軸承 / LINK BALL BEARING
BL Series

材 質
- 主 體：高強度鋅合金
- 活動柄：碳鋼 , 表面鍍鋅 (Cr3+)
- 防塵套：特殊合成橡膠，NBR

MATERIALS
- **BODY:** High Strength Zinc Alloy
- **BALL STUD:** Carbon Steel , Zinc Coated (Cr3+)
- **BOOT:** Special Synthetic Rubber, NBR

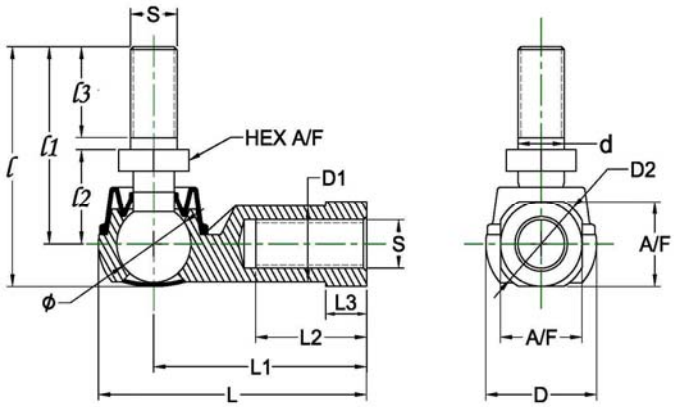

■ 間隙 (mm)
徑向間隙值：0.02~0.06
軸向間隙值：小於0.3

■ Clearance (Unit: mm)
Radial Clearrance:0.02~0.06
Axial Clearance:0.3 or less

公 制 尺 寸 / DIMENSIONS IN METRIC mm

型 號	外 型 尺 寸 Outline Dimensions			螺紋 Thread	主 體 尺 寸 Body Dimensions						活 動 柄 尺 寸 Ball Stud Dimensions						旋角	荷重 S. load	重量 Weight
Model No.	L	D	ℓ	S	L1	L2	L3	D1	D2	A/F +0 -0.3	ℓ1	ℓ2	ℓ3 ±0.3	d -0.05	六角HEX A/F +0 -0.3	Ball Dia. Ø	2θ	(kgf)	(g)
BL 6 R/L	38	16	32.6	6x1.0	30	16	5	10	13	11	26	11	11	6	10	11.11	40	380	28
BL 8 R/L	45.5	19	38.6	8x1.25	36	19	6	12.5	16	14	31	14	12	8	12	12.70	40	630	48
BL 10 RF/LF	55.5	25	46.3	10x1.25	43	23	7	14.5	19	17	37	17	15	10	14	15.88	40	1090	87
BL 10 R/L	55.5	25	52.3	10x1.5	43	23	7	14.5	19	17	43	17	21	10	14	15.88	40	1090	87
BL 12 RF/LF	65.5	31	53	12x1.25	50	26	8	17.5	22	19	49	19	17	12	17	19.05	40	1400	155
BL 12 R/L	65.5	31	61.5	12x1.75	50	26	8	17.5	22	19	49	19	24	12	17	19.05	40	1400	160

連球軸承 / LINK BALL BEARING
YL Series

接單生產 (MADE BY ORDER)

材 質
- 主 體：中碳快削鋼1144, 表面鍍鉻
- 活動柄：中碳鋼 S45C，表面鍍鉻
- 卡 簧：彈簧鋼

MATERIALS
- **BODY:** Free Cutting Steel 1144, Chrome Plated
- **BALL STUD:** Medium Carbon Steel S45C, Chrome Plated
- **SPRING:** Spring Steel

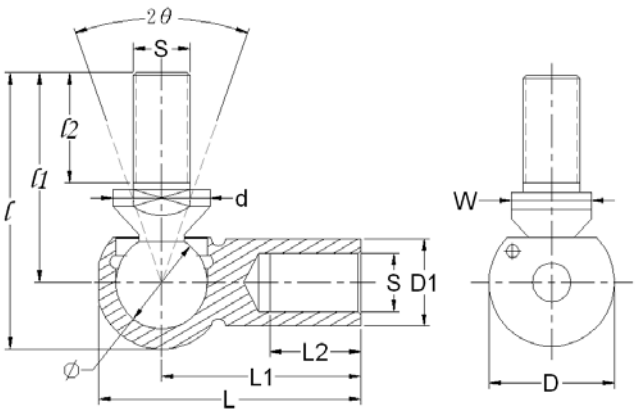

公 制 尺 寸 / DIMENSIONS IN METRIC mm

型 號 Model No.	外 型 尺 寸 Outline Dimensions L	D	ℓ	螺紋 Thread S	主 體 尺 寸 Body Dimensions L1	L2	D1	活 動 柄 尺 寸 Ball Stud Dimensions ℓ1 ±0.3	ℓ2	d	W +0 -0.3	Ball Dia. Ø	最小拉拔力 Min. Seperation Force (kgf)	重量 Weight (g)
YL 5 R/L	28	13	29	5x0.8	22	10	8	19	10	8	7	8	3	15
YL 6 R/L	32	15	30.5	6x1.0	25	11.5	10	23.5	12.5	10	8	10	4	25
YL 8 R/L	40	21	38	8x1.25	30.5	14	13	29.5	16.5	13	11	13	6	55
YL 10 RF/LF	46	24	46.5	10x1.25	35	16	15	36	20	16	14	16	8	104
YL 10 R/L	46	24	46.5	10x1.5	35	16	15	36	20	16	14	16	8	104
YL 12 RF/LF	46	24	46.5	12x1.25	35	16	17	36	20	16	14	16	8	104
YL 12 R/L	46	24	46.5	12x1.75	35	16	17	35	20	16	14	16	8	104
YL 14 RF/LF	57.5	25	60.5	14x1.5	45	22	19	36	28	20	16	19	10	220
YL 14 R/L	57.5	25	60.5	14x2.0	45	22	19	48	28	20	16	19	10	220
YL 16 RF/LF	57.5	25	60.5	16x1.5	45	22	21	48	28	20	16	19	10	220
YL 16 R/L	57.5	25	60.5	16x2.0	45	22	21	48	28	20	16	19	10	220

***註：YL 系列為接單生產。 *NOTE: YL Series are made by order.**

浮動接頭軸承 / FLOATING JOINT BEARING
FJ Series

接單生產 (MADE BY ORDER)

FJ 8 to 10

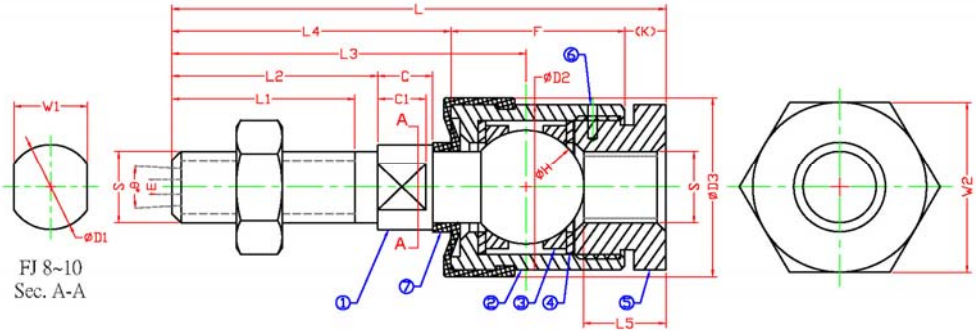

FJ 12 to 36

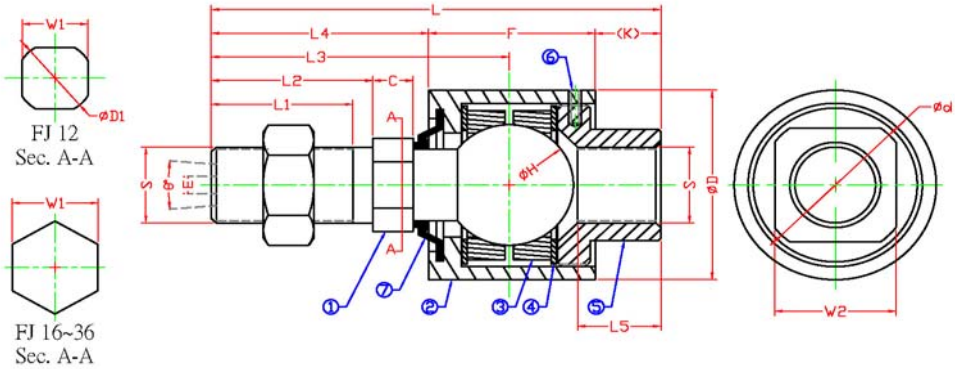

組成零件

編 號	名 稱	材 料 說 明
1	球頭牙桿	FJ 8~10: 滲碳鋼珠、中碳鋼 S45C，鍍鋅 FJ 12~36: 合金鋼 SCM415，熱處理，鍍鋅
2	主體外框	中碳鋼 S45C，鍍鋅
3	固定環	軸承鋼 SUJ-2，熱處理，二硫化鉬處理
4	華司	高碳鋼 SK-5，熱處理，二硫化鉬處理
5	後蓋	中碳鋼 S45C，鍍鋅
6	固定梢	
7	防塵蓋	合成橡膠 NBR

Component Parts

No.	Part	Materials & Description s
1	**Ball stud**	FJ 8~10: Steel Ball, Carbon Steel S45C, Zinc Plated FJ 12~36: Alloy Steel SCM415, Heat Treated , Zinc Plated
2	**Case**	Carbon Steel S45C, Zinc Plated
3	**Ring**	Bearing Steel SUJ-2, Heat Treated, MoS2 Treated
4	**Washer**	High Carbon Steel SK-5, Heat Treated, MoS2 Treated
5	**Socket**	Carbon Steel S45C, Zinc Plated
6	**Ping**	
7	**Boots**	Synthetic Rubber NBR

公 制 尺 寸 / DIMENSIONS IN METRIC mm

型號 Model No	Thread S	L	L1	L2	L3	L4	L5	C	C1	F	K	d	D	D1	D2	D3	W1		W2		ØH	搖動角 θ	偏擺量 E	靜負荷容量 KN
FJ 8	8x1.25	54	20	22.5	38.7	30.5	9	6	4.5	19	4.5	-	-	9.5	18.5	20	8	0 -0.25	19	0 -0.35	12.7	10	1	9.02
FJ 10	10x1.25	63	22	24.5	44	34	11.2	6	4.5	24	5	-	-	12.5	23.5	25	10	0 -0.25	24	0 -0.35	15.9	10	2	12.3
FJ 12	12x1.25	69.5	21	24	46	33	12.9	7	15	21.5	9	24	32	-	-	-	13	0 -0.25	19	0 -0.35	19.1	10	2	19.1
FJ 16	16x1.5	89	28	32	59	43	16.3	8	-	33	13	30	40	-	-	-	17	0 -0.25	24	0 -0.35	24.5	10	3	36.8
FJ 18	18x1.5	92	31	35	62	46	17.3	8	-	33	13	30	40	-	-	-	17	0 -0.25	24	0 -0.35	24.5	10	3	36.8
FJ 20	20x1.5	110	35	40	72	53	20.8	9	-	42	15	38	50	-	-	-	22	0 -0.35	30	0 -0.35	31.8	10	4	57.3
FJ 24	24x1.5	129.5	41	46	86	62	25.5	12	-	49	18.5	48	64	-	-	-	24	0 -0.35	36	0 -0.35	38	10	5	82.8
FJ 24B	24x2.0	129.5	41	46	86	62	25.5	12	-	49	18.5	48	64	-	-	-	24	0 -0.35	36	0 -0.35	38	10	5	82.8
FJ 27	27x2.0	158	47	54	102	74.5	34.5	14	-	62	21.5	60	76	-	-	-	32	0 -0.4	46	0 -0.4	48	10	5	132
FJ 30	30x1.5	162	52	58	106	78.5	34.5	14	-	62	21.5	60	76	-	-	-	32	0 -0.4	46	0 -0.4	48	10	5	132
FJ 30B	30x2.0	162	52	58	106	78.5	34.5	14	-	62	21.5	60	76	-	-	-	32	0 -0.4	46	0 -0.4	48	10	5	132
FJ 36T	36x2.0	200	64	72	129	96	44.5	18	-	80	24	70	88	-	-	-	36	0 -0.4	55	0 -0.4	55	10	6	194

***註：FJ 系列為接單生產。 *NOTE: FJ Series are made by order.**

特殊規格客製品 / OEM Products

我們可為客戶生產特殊規格之客製品，以滿足您的需求。
We do OEM products (in any size, shape and structure) to meet your needs.

OEM 1

OEM 2

OEM 3

OEM 4

OEM 5

OEM 6

OEM 7

OEM 8

OEM 9

OEM 10

OEM 11

OEM 12

OEM 13

OEM 14

特殊規格客製品 / OEM Products

我們可為客戶生產特殊規格之客製品，以滿足您的需求。
We do OEM products (in any size, shape or structure) to meet your needs.

OEM 15

OEM 16

OEM 17

OEM 18

OEM 19

OEM 20

OEM 21

OEM 22

OEM 23

附錄 I / INDEX I

- 常用轉換因子
  CONVERSION FACTORS

英吋(Inch)	X 25.4	= 公釐(mm)	公釐 (mm)	X 0.03937	= 英吋(inch)

公斤 (Kgf)	X 2.2046	= 英磅(Lbs)	公斤(Kgf)	X 9.81	= 牛頓(Newtons)
英磅 (Lbs)	X 0.4536	= 公斤(Kgf)	英磅(Lbs)	X 4.448	= 牛頓(Newtons)
牛頓(Newtons)	X 0.2248	= 英磅(Lbs)			

- ISO 孔徑誤差表(ISO 286-2), H7
  ISO Tolerances for Holes (ISO 286-2), H7

常用孔徑 / Nominal hole sizes (B mm)							
大於 Over	3	6	10	18	30	40	50
小於 Inc.	6	10	18	30	40	50	65
公差 △Bmp (*u*m)							
H7	12	15	18	21	25		30
	0	0	0	0	0	0	0

- ISO 外徑誤差表(ISO 286-2), h7
  ISO Tolerances for Shaft (ISO 286-2), h7

常用外徑 / Nominal shaft sizes (D mm)							
大於 Over	3	6	10	18	30	40	50
小於 Inc.	6	10	18	30	40	50	65
公差 △Dmp (*u*m)							
h7	0	0	0	0	0		0
	-12	-15	-18	-21	-25		-30

- 桿端軸承及球面軸承內圓誤差表(SI_E, SA_E, SI_T, SA_T 系列)（GE, GE_C 系列)
  Tolerances of inner ring for rod end bearings (SI_E,SA_E,SI_T,SA_T Series) and spherical bearings(GE, GE_C Series)

內圓 Inner ring (B mm)				
大於 Over	-	18	30	50
小於 Inc.	18	30	50	80
公差 △Bmp (*u*m)				
Max.	0	0	0	0
Min.	-8	-10	-12	-15

- 球面軸承外框誤差表（GE, GE_C 系列)
  Tolerances of outer ring for spherical bearings (GE, GE_C Series)

外框 Outer ring (D mm)					
大於 Over	-	18	30	50	80
小於 Inc.	18	30	50	80	120
公差 △Dmp (*u*m)					
Max.	0	0	0	0	0
Min.	-8	-9	-11	-13	-15

S.B. Rod Ends

URS is a member of Registrar of Standards (Holdings) Ltd.

ISO9001 Certificated

唐立軸承企業股份有限公司

STRUENING BEARINGS CO., LTD.

42942台中市神岡區豐洲科技工業園區堤南路26號
No.26, Tinan Rd., Fongjhou Science Park, Shengang Dist.,
Taichung City 42942, Taiwan
TEL:+886-4-25153990
FAX:+886-4-25153121
http://www.s-b-bearings.com/

2015版